STATE OF VERMONT
PUBLIC SERVICE BOARD

Application of Orchard Road Solar I, LLC for a certificate of public good, pursuant to 30 V.S.A. §§ 219a and 248, to install and operate a 500 kW group net metered solar electric generation facility located on Orchard Road in Middletown Springs, Vermont, to be known as the "Orchard Road Solar Project"	)	CPG #NMP ____

APPLICATION, PREFILED TESTIMONY AND EXHIBITS, AND OTHER INITIAL FILINGS

July 15, 2016

Geoffrey H. Hand, Esq.
Victoria M. Westgate, Esq.
Dunkiel Saunders Elliott Raubvogel & Hand, PLLC
91 College Street
P.O. Box 545
Burlington, Vermont 05402-0545
ghand@dunkielsaunders.com
vwestgate@dunkielsaunders.com
(802) 860-1003

STATE OF VERMONT
PUBLIC SERVICE BOARD

Application of Orchard Road Solar I, LLC for a certificate of public good, pursuant to 30 V.S.A. §§ 219a and 248, to install and operate a 500 kW group net metered solar electric generation facility located on Orchard Road in Middletown Springs, Vermont, to be known as the "Orchard Road Solar Project"	)	CPG #NMP ____

TABLE OF CONTENTS AND LIST OF PREFILED TESTIMONY AND EXHIBITS

TAB	DOCUMENT
Cover Materials	Cover Sheet
	Table of Contents and List of Prefiled Testimony and Exhibits
	Cover Letter
	Certificate of Service
	Section 219a/248 Application
	Adjoiners and Town Selectboard Letter
	Notice of Appearance
	Proposed Findings of Fact
	Proposed CPG
	ANR Fee Form
Viens	**Prefiled Direct Testimony of Rod Viens**
	ORS-RV-1: Resume of Rod Viens
	ORS-RV-2: Site Plan and Elevation Plan
	ORS-RV-3: Equipment Specs
	ORS-RV-4: Electrical One-Line Diagram
	ORS-RV-5: 45-Day Notice Package
	ORS-RV-6: Fast Track Analysis
	ORS-RV-7: VDHP Letter
Barton	ORS-DB-1: Resume of Dori Barton
	ORS-DB-2: Arrowwood Environmental Natural Resources Report and Affidavit of Dori Barton
Goddard	**Prefiled Direct Testimony of Seth Goddard**
	ORS-SG-1: Resume of Seth Goddard
	ORS-SG-2: Sound Study
Kane	ORS-MK-1: Resume of Mark Kane
	ORS-MK-2: SE Group Aesthetics Report and Affidavit of Mark Kane

Dunkiel Saunders
ELLIOTT | RAUBVOGEL | HAND

91 College Street, PO Box 545
Burlington, VT 05402-0545
tel 802.860.1003 | fax 802.860.1208
www.dunkielsaunders.com

Brian S. Dunkiel [+]
Eileen I. Elliott
Geoffrey H. Hand
John B. Kassel
Drew Kervick [*]
Alexander G. Lewis [°]
Kelly D. H. Lowry [^]
Justin W. McCabe [#]
Andrew N. Raubvogel
Jonathan T. Rose
Mark A. Saunders
Karen L. Tyler
Victoria M. Westgate

July 15, 2016

By Hand Delivery

Ms. Judith Whitney, Clerk
Vermont Public Service Board
112 State Street, Drawer 20
Montpelier, VT 05620-2701

Re: Application of Orchard Road Solar I, LLC for a certificate of public good, pursuant to 30 V.S.A. §§ 219a and 248 to install and operate a 500 kW group net metered solar electric generation facility to be located on Orchard Road in Middletown Springs, Vermont.

Dear Ms. Whitney:

On behalf of Orchard Road Solar I, LLC ("ORS"), I am pleased to enclose for filing in the above matter the original and two copies of a §§ 219a/248 Application requesting Board approval for the installation and operation of a 500 kW group net metered solar electric generation facility located on Orchard Road in Middletown Springs, Vermont to be known as the "Orchard Road Solar Project."

As indicated in the attached Certificate of Service, a complete copy of this application has been provided to the Public Service Department, the Agency of Natural Resources, Green Mountain Power, the Middletown Springs Planning Commission, and the Rutland Regional Planning Commission. Notice of the Application was also provided to the Middletown Springs Selectboard and all adjoining landowners by copy of the letter included with this Application.

ORS is pleased to file this Application and looks forward to commencement of the Board's review of its proposal. Please do not hesitate to contact us if you need any further information, and thank you for your attention to this matter.

Sincerely,

Geoffrey H. Hand, Esq.
Victoria M. Westgate, Esq.
DUNKIEL SAUNDERS ELLIOTT RAUBVOGEL & HAND, PLLC

cc: Service List

Enclosures

STATE OF VERMONT
PUBLIC SERVICE BOARD

Application of Orchard Road Solar I, LLC for a certificate of public good, pursuant to 30 V.S.A. §§ 219a and 248, to install and operate a 500 kW group net metered solar electric generation facility located on Orchard Road in Middletown Springs, Vermont, to be known as the "Orchard Road Solar Project"	)	CPG #NMP ____

CERTIFICATE OF SERVICE

I, Gillian Bergeron, certify that on July 15, 2016, I forwarded copies of Orchard Road Solar I, LLC's *Sections 219a and 248 Application, Prefiled Testimony and Exhibits, and other Initial Filings* to the below service list by the format indicated, and by the delivery method noted below:

By Hand Delivery:
Ms. Judith Whitney, Clerk
Vermont Public Service Board
112 State Street, Drawer 20
Montpelier, VT 05620-2701
(CD and 3 hard copies)

By First Class Mail (CD and hard copy):
Vermont Agency of Natural Resources
Secretary's Office
1 National Life Drive, Davis 2
Montpelier, VT 05620-3901

Vermont Public Service Department
Commissioner's Office and
Director of Public Advocacy
112 State Street, 3rd Floor
Montpelier, VT 05620-2601

Rutland Regional Planning Commission
PO Box 965
Rutland, VT 05702

Middletown Springs Planning Commission
PO Box 1232
Middletown Springs, VT 05757

Green Mountain Power Corporation
163 Acorn Lane
Colchester, VT 05446

I also certify that I forwarded copies of Orchard Road Solar I, LLC's letter to adjoining landowners regarding Notice of the Application to the below service list by **First Class Mail:**

Middletown Springs Selectboard
PO Box 1232
Middletown Springs, VT 05757

Spitalny, Richard M
24 Tanglewild Rd.
Chappaqua, NY 10514

Fitzpatrick, Ted & Dina
12525 Jot Em Down Lane
Odessa, FL 33556

Bartlett, Steven & Debra
120 Orchard Road
Middletown Springs, VT 05757

Lattuca, Russell A
623 Marlbury Lane
Longboard Key, FL 34228

Gaeckle, Robert & Claire
45 Beekman Rd.
Summit, NJ 07901

Parker, Gerald & Janet
PO Box 627
Poultney, VT 05741

Wilder, Frank A & Janice A
260 West St.
Middletown Springs, VT 05757

Freilich, Douglas & Sperling, Julie
PO Box 65
Pawlet, VT 05761

Gutmann, Karen L
290 West St.
Middletown Springs, VT 05757

Russell, Thomas
300 West St.
Middletown Springs, VT 05757

Rocks & Trees, Inc
C/O Ellen Secord
320 West St.
Middletown Springs, VT 05757

Lamson, Brian & Connie
334 West St.
Middletown Springs, VT 05757

Cooper, Roy & Elizabeth
327 West St.
Middletown Springs, VT 05757

Marcy, Marilyn & Labate, Maureen
21 North St.
Middletown Springs, VT 05757

Labate, Maureen
1537 Finel Hollow Road
Poultney, VT 05764

Parker, Jerry
425 East Road
Poultney, VT 05764

Russell, Neil & Elizabeth
PO Box 279
West Rutland, VT 05777

Dated at Burlington, Vermont this 15th day of July, 2016.

By:

Gillian Bergeron
Paralegal

STATE OF VERMONT
PUBLIC SERVICE BOARD

Application of Orchard Road Solar I, LLC for a certificate of public good, pursuant to 30 V.S.A. §§ 219a and 248, to install and operate a 500 kW group net metered solar electric generation facility located on Orchard Road in Middletown Springs, Vermont, to be known as the "Orchard Road Solar Project"	)	CPG #NMP ____

APPLICANT ORCHARD ROAD SOLAR I, LLC'S
APPLICATION FOR A SECTION 219a CERTIFICATE OF PUBLIC GOOD

Now comes Orchard Road Solar, I, LLC ("ORS") and files this Application pursuant to 30 V.S.A. §§ 219a and 248 and Public Service Board Rule 5.100 requesting that the Board issue a Certificate of Public Good ("CPG") for a 500 kilowatt group net metered facility to be located on Orchard Road in Middletown Springs, Vermont ("Project").

In support of the Application, ORS provides the following summary of relevant information, which is further detailed in the attached prefiled testimony and reports of Rod Viens, Seth Goddard, Mark Kane, and Dori Barton.

1. Applicant

Orchard Road Solar, I, LLC
c/o Peter Bay
Global Resource Options, Inc (groSolar)
205 Billings Farm Road, Building 4
White River Junction, VT 05001

Orchard Road Solar I, LLC is a firm specializing in the development of solar projects in Vermont.

2. Host Landowners

The host landowners are Daniel T. Querrey and Judy Gannon Querrey. The Project is located at 30 Orchard Road, Middletown Springs, VT.

3. Adjoining Landowners

See attached list.

4. Project Description and Environmental Criteria

See attached prefiled testimony and exhibits.

5. Meters to be included in the Group

In addition to new service for the system, the following meters and their locations will be included in the group:

Customer Meter #	Location
E14981223	N. Montpelier Road, Plainfield, VT
E15264415	Greatwood Drive, Plainfield, VT
E14981224	N. Montpelier Road, Plainfield, VT
E14829727	N. Montpelier Road, Plainfield, VT

6. Method for adding/removing meters in the group; directions for utility to allocate credits among meters

Meters will be added and removed from the group by agreement of the Customer(s) and ORS. Net metering credits will be allocated among meters in the group as follows, subject to change by agreement of ORS and each Customer:

The Project will use the "stacking" allocation model. ORS will instruct Green Mountain Power to allocate credits for the kilowatt hours of electricity generated by the Project each month to the Meters set forth above in the following order of priority until the monthly electricity usage, charges and fees for each Meter are fully offset and satisfied.

7. Designated person responsible for all communication with utility

Rod Viens
Global Resource Options, Inc. (groSolar)
205 Billings Farm Road
Building 4
White River Junction VT 05001
Rod.viens@grosolar.com
802-359-6520

8. **Binding process for dispute resolution that does not rely on utility, PSB, or DPS (aside from billing disputes with utility)**

All disputes between the group members will be settled by the group administrator, ORS, in its sole discretion. In no event will ORS require the Public Service Board, the Public Service Department, or Green Mountain Power to resolve a dispute within the group net metering system.

9. **Certification Regarding Notice Requirements**

The undersigned certifies that the Applicant Orchard Road Solar, I, LLC provided advance 45-day notice of the Project by letter dated May 11, 2016 to all of the individuals and entities identified on **Exhibit ORS-RV-5.** Adjoining landowners were identified based on the most recent grand list available from Middletown Springs, Vermont. The notice complied with the statutes and regulations – 30 V.S.A. §§ 219a and 248 and PSB Rule 5.100 – that were in effect at the time the notice was provided. A copy of the 45-day notice is included with this application as **Exhibit ORS-RV-5**.

10. **Section 219a(c)(3) Statement Regarding Ownership of Environmental Attributes**

The owner of the Project will retain ownership of the environmental attributes of any electricity generated by the net metering system.

Rod Viens
EVP, goSolar
on behalf of Orchard Road Solar I, LLC

Orchard Road Solar Project
List of Adjoining Landowners

Spitalny, Richard M
24 Tanglewild Rd.
Chappaqua, NY 10514

Fitzpatrick, Ted & Dina
12525 Jot Em Down Lane
Odessa, FL 33556

Bartlett, Steven & Debra
120 Orchard Road
Middletown Springs, VT 05757

Lattuca, Russell A
623 Marlbury Lane
Longboard Key, FL 34228

Gaeckle, Robert & Claire
45 Beekman Rd.
Summit, NJ 07901

Parker, Gerald & Janet
PO Box 627
Poultney, VT 05741

Wilder, Frank A & Janice A
260 West St.
Middletown Springs, VT 05757

Freilich, Douglas & Sperling, Julie
PO Box 65
Pawlet, VT 05761

Gutmann, Karen L
290 West St.
Middletown Springs, VT 05757
Russell, Thomas
300 West St.
Middletown Springs, VT 05757

Rocks & Trees, Inc
C/O Ellen Secord
320 West St.
Middletown Springs, VT 05757

Lamson, Brian & Connie
334 West St.
Middletown Springs, VT 05757

Cooper, Roy & Elizabeth
327 West St.
Middletown Springs, VT 05757

Marcy, Marilyn & Labate, Maureen
21 North St.
Middletown Springs, VT 05757

Labate, Maureen
1537 Finel Hollow Road
Poultney, VT 05764

Parker, Jerry
425 East Road
Poultney, VT 05764

Russell, Neil & Elizabeth
PO Box 279
West Rutland, VT 05777

Dunkiel Saunders
ELLIOTT | RAUBVOGEL | HAND

91 College Street, PO Box 545
Burlington, VT 05402-0545
tel 802.860.1003 | fax 802.860.1208
www.dunkielsaunders.com

Brian S. Dunkiel *
Eileen I. Elliott
Geoffrey H. Hand
John B. Kassel

Drew Kervick *
Alexander G. Lewis °
Kelly D. H. Lowry ^
Justin W. McCabe ®
Andrew N. Raubvogel

Jonathan T. Rose
Mark A. Saunders
Karen L. Tyler
Victoria M. Westgate

July 15, 2016

To: Middletown Selectboard and Adjoining Landowners to proposed Orchard Road Solar Project

Re: Application of Orchard Road Solar I, LLC for a certificate of public good, pursuant to 30 V.S.A. §§ 219a and 248 to install and operate a 500 kW group net metered solar electric generation facility to be located on Orchard Road in Middletown Springs, Vermont.

Dear Selectboard and Adjoining Landowners:

The purpose of this letter is to provide you notice that Orchard Road Solar I, LLC ("ORS") has submitted an Application to the Vermont Public Service Board ("PSB") for approval of a net metered solar energy project to be located on Orchard Road in Middletown Springs, Vermont. An electronic copy of the Application may be obtained by contacting ORS at the address below:

Peter Bay
Global Resource Options, Inc. (groSolar)
205 Billings Farm Road, Building 4
White River Junction, VT 05001
Peter.bay@grosolar.com
802-272-6519

The PSB will review the Application and will decide whether to issue a certificate of public good for the Project. Under PSB Rule 5.100, individuals have 21 days to submit comments on the Application, request a hearing, and/or seek to intervene in the proceeding. Any questions concerning the PSB process for reviewing net metering applications under PSB Rule 5.100 may be directed to the Clerk of the PSB at the following address:

Judith Whitney, Clerk
Vermont Public Service Board
112 State Street
Montpelier, VT 05620-2701
Psb.clerk@state.vt.us
(802) 828 2358

Thank you for your attention to this matter.

Sincerely,

Geoffrey H. Hand, Esq.
Victoria M. Westgate, Esq.
Dunkiel Saunders Elliott Raubvogel & Hand, PLLC
On behalf of Orchard Road Solar I, LLC

STATE OF VERMONT
PUBLIC SERVICE BOARD

Application of Orchard Road Solar I, LLC for a certificate of public good, pursuant to 30 V.S.A. §§ 219a and 248, to install and operate a 500 kW group net metered solar electric generation facility located on Orchard Road in Middletown Springs, Vermont, to be known as the "Orchard Road Solar Project"	)	CPG #NMP ____

NOTICE OF APPEARANCE

Pursuant to PSB Rule 2.201(A), the undersigned attorneys hereby enter their appearance on behalf of Applicant Orchard Road Solar I, LLC in the above mentioned matter.

Dated at Burlington, Vermont, this 15th day of July, 2016.

Orchard Road Solar I, LLC

By:

Geoffrey H. Hand, Esq.
Victoria M. Westgate, Esq.
DUNKIEL SAUNDERS ELLIOTT RAUBVOGEL & HAND, PLLC
91 College Street
PO Box 545
Burlington, VT 05402-0545
(802) 860-1003
ghand@dunkielsaunders.com

STATE OF VERMONT
PUBLIC SERVICE BOARD

CPG #NMP ____

Application of Orchard Road Solar I, LLC for a certificate of public good, pursuant to 30 V.S.A. §§ 219a and 248, to install and operate a 500 kW group net metered solar electric generation facility located on Orchard Road in Middletown Springs, Vermont, to be known as the "Orchard Road Solar Project"	)	Hearing at Montpelier, Vermont [Date of Hearing]

Order entered: _____

APPLICANT ORCHARD ROAD SOLAR I, LLC'S PROPOSED FINDINGS OF FACT AND ORDER

I. Introduction

This docket concerns an application filed by Orchard Road Solar I, LLC ("ORS"), pursuant to 30 V.S.A. §§ 219a and 248 and Public Service Board ("Board" or "PSB") Rule 5.100, requesting the Board to issue a Certificate of Public Good for the installation and operation of a 500 kW group net metered solar electric generation facility to be located on Orchard Road in Middletown Springs, Vermont (the "Project"). The Board has reviewed the materials filed by the Applicant and approves the application as follows.

II. Procedural History

On July 15, 2016 ORS filed its application with the Board requesting a CPG pursuant to 30 V.S.A. §§ 219a and 248 to install and operate a 500 kW group net metered solar electric generating facility on the premises of a former commercial apple orchard, located at approximately 30 Orchard Road in Middletown Springs, Vermont. Upon filing its application with the Board, ORS also submitted copies of its application to the Middletown Springs Planning Commission, the Rutland

Regional Planning Commission, the Agency of Natural Resources, the Department of Public Service, and Green Mountain Power ("GMP")—the serving electric utility. ORS also noticed the Middletown Springs Selectboard and adjoining property owners to inform them that the application had been filed with the Board.

A 45-day notice for the Project was provided to the Town and Regional Planning Commissions, the City of Middletown Springs Selectboard, adjoining landowners, the serving electric utility (Green Mountain Power), the Agency of Natural Resources, and the Public Service Department on May 11, 2016. This notice complied with the requirements of Board Rule 5.110(c), effective January 27, 2014.

The Clerk of the Board deemed the filing complete by notice to the applicant dated _____, 20__. The 21-day comment period expired on _____. No person requested a hearing or attempted to show that the application raised any significant issue regarding the criteria in Rule 5.108 or any of the conditionally waived criteria.

III. Findings

Based on the application and the associated prefiled testimony and exhibits and the absence of any factual disputes, this matter is ready for decision.

A. Project Description

1. Orchard Road Solar I, LLC is a Vermont limited liability company, registered to do business in Vermont, with principal offices at 205 Billings Farm Road, Building 4, White River Junction, VT 05001. Viens pf. at 1.
2. ORS is developing the Project in conjunction with Global Resource Options, Inc. (d/b/a groSolar). Viens pf. at 1.

3. The Project consists of the installation and operation of a no more than 500 kW AC capacity solar electric generation system, which is expected to produce approximately 850,000 kWh per year. Viens pf. at 2, 5.

4. The Project will be sited on approximately 5 acres of land that is being leased from a larger existing tract of land (approximately 126 acres) off of Orchard Road in Middletown Springs, Vermont. The Project is proposed to be located on part of an old apple orchard that is no longer being used for apple production. Viens pf. at 2-3; Exh. ORS-RV-2.

5. The Project will be accessed via an existing access drive from the Wescott Road which will be extended as a 12' permanent access drive into the Project area. Viens pf. at 9; Exh. ORS-RV-2.

6. As measured from the closest panel, the Project is set back approximately 135 feet from Wescott Road and approximately 400 feet from Orchard Road and includes a 50-foot buffer between the array structures and adjacent property boundaries. Viens pf. at 3; Exh. ORS-RV-2.

7. All setbacks conform to state minimum standards from highways and bordering property boundaries. Viens pf. at 6.

8. The Project's equipment consists of the following: approximately 2,250 330-watt individual solar photovoltaic panels, a metal rack support structure for fixed racking under the panels to create collector arrays, approximately 21 string inverters with a maximum capacity of 500 kW AC, electrical lines connecting the panels to the inverters and an underground conduit or above ground cable tray connecting to the switchgear enclosures, and underground electrical lines from the switchgear to three 167 kVA pole mounted transformers and the Green Mountain Power ("GMP") distribution system. The final selection of equipment will be

made after all permitting is complete and Applicant selects equipment manufacturers. Viens pf. at 5, 7; Exhs. ORS-RV-2; ORS-RV-3; ORS-RV-4.

9. The individual solar panels that comprise the array will be mounted on a fixed tilt racking system. The racks will sit upon either steel poles driven into the ground or "earth screws" that are similarly screwed into the ground. This minimizes disturbance to the soil and vegetation at the site. The support structures will hold the solar panels at approximately three feet above the ground, allowing snow to slide off the panels and pile up without compromising energy production. At their highest point, the solar panels will sit approximately nine feet above the ground. Racks for the fixed tilt system will be oriented east-west and hold the panels at a fixed angle of approximately 30 degrees. Viens pf. at 3; Exhs. ORS-RV-2, ORS-RV-3.

10. The electrical system consists of groups of solar panels wired in series, each a "string." The DC power from a few strings runs to the string inverter where it is converted to AC power. There will be approximately 21 string inverters with a maximum output of 500 kW AC. From there, wiring will run from the inverters to the pole-mounted transformers and the interconnection point along Wescott Road. Viens pf. at 8-9; Exh. ORS-RV-2.

11. Underground power will be installed along the proposed access drive, or alongside it as indicated on the site plan, from Wescott Road to the Project area to minimize aesthetic and environmental impacts that would otherwise result from installing poles leading from Wescott Road into the Project. Viens pf. at 7; Exhs. ORS-RV-2; ORS-RV-4.

12. In addition to a new pole location to support the transformers at the point of interconnection along Wescott Road, approximately three (3) utility poles will be replaced to accommodate new three-phase wire running from the corner of Orchard Road and Wescott Road to the Project. Viens pf. at 7; Exhs. ORS-RV-2.

13. The site will be enclosed within a fixed-knot fence with 6-inch vertical spacing that will be 7' to 8' high. To blend into the surrounding landscape, fence posts will be wood. The fencing will be secured and kept close to ground level to avoid access by wildlife. Viens pf. at 7; Exhs. ORS-RV-2; ORS-RV-3.

14. The fence and electrical system conform to applicable electric safety, power quality, and interconnection requirements established by the National Electric Code, and the Institute of Electrical and Electronic Engineers and Underwriters Laboratories. Viens pf. at 8.

15. The Project is proposed to be located on part of an old apple orchard that is no longer being used to grow apples. There is little site preparation needed for the Project other than removing selective tree and brush clearing within the Project area as shown on the site plan. No grading is planned aside from the installation of the access road and equipment pad. Viens pf. at 5; Exh. ORS-RV-2.

16. There is a residential structure along with a barn on the northern portion of the 126-acre parcel, separated from the Project area by Wescott Road and Orchard Road approximately 1,000' away. The nearest offsite residential structure from the Project lies approximately 400 feet to the West of the Project. The next nearest residence is on the adjoining parcel to the southeast, approximately 900 feet away. There are no residences in the general vicinity to the east of the Project. Viens pf. at 5; Exh. ORS-RV-2.

17. At the end of the Project's useful life, the project equipment will be removed from the site and sold, recycled, or disposed of in accordance with applicable waste regulations. Any stockpiled soils from Project construction will be graded back into the Project parcel and the land will remain viable for whatever uses the landowner chooses. Viens pf. at 16.

B. Section 219a Requirements

18. The Project is a group net-metered 500 kW (AC) solar electric generation project that will operate in parallel with facilities of the electric distribution system. The Project employs a renewable energy resource – solar energy – and its electrical output is intended primarily to offset the electricity requirements of its group members. Viens pf. at 3; Section 219a application.

19. Group members will include the following meters:

Customer Meter #	Location
E14981223	N. Montpelier Road, Plainfield, VT
E15264415	Greatwood Drive, Plainfield, VT
E14981224	N. Montpelier Road, Plainfield, VT
E14829727	N. Montpelier Road, Plainfield, VT

Orchard Road Solar will finalize the group members and identify specific allocations as required under Board rules prior to Project operations. Viens pf. at 4.

20. The Project will use the "stacking" allocation model. Orchard Road Solar will instruct GMP to allocate credits for the kilowatt hours of electricity generated by the Project each month to the meters set forth above in the following order of priority until the monthly electricity usage, charges and fees for each meter are fully offset and satisfied. Viens pf. at 4.

21. If any group members are added, Orchard Road Solar will provide the Board and the interconnecting utility with the allocation amounts, meters, and account numbers per Board rules. The procedure for adding and subtracting meters from the group is at the sole discretion of Orchard Road Solar I, LLC. Viens pf. at 4.

22. The binding dispute resolution process for any disputes is as follows: all disputes between the group members will be settled by the group administrator, Orchard Road

Solar I, LLC, in its sole discretion. In no event will Orchard Road Solar require the Public Service Board, the Public Service Department, or Green Mountain Power to resolve a dispute within the group net metering system. Viens pf. at 4.

23. The designated contact person for all communications is Rod Viens, groSolar, 205 Billings Farm Road, Building 4, White River Junction, VT 05001. Viens pf. at 4.

Discussion

Pursuant to 30 V.S.A. § 219a(c), Board Rule 5.108 (effective January 27, 2014) conditionally waives certain requirements of § 248(b) that are not applicable to various types of net metering systems. This Project is a system that would be installed as a new structure and therefore falls under Board Rule 5.108(B). The Rule states that the following criteria are conditionally waived:

1. All criteria under 30 V.S.A. § 248(b), with the exception of 30 V.S.A. §§ 248(b)(1) (orderly development), (3)(stability and reliability), (5)(environmental considerations), and (8)(outstanding resource waters).
2. With respect to 30 V.S.A. § 248(b)(5), all criteria and subcriteria, except for compliance with 10 V.S.A. §§ 6086(a)1(A)(headwaters), 1(B)(waste disposal), 1(D)(floodways), 1(E)(streams), 1(F)(shorelines), 1(G)(wetlands), 4(soil erosion), 5(traffic impacts during construction only), 8(aesthetics, historic sites, natural areas), 8(A)(necessary wildlife habitat), and (9)(K)(public facilities). If the system uses biomass as a fuel, compliance shall also be required with 10 V.S.A. § 6086(a)(1)(air pollution).

C. Section 248 Criteria

30 V.S.A. § 248(b)(1) – Orderly Development of the Region

24. The Project will not unduly interfere with the orderly development of the region, with due consideration having been given to the recommendations of the municipal and regional planning commissions, the recommendations of municipal legislative bodies, and the land conservation measures contained in the plan of any municipalities. This finding is supporting by the following findings, below.

25. 45-day notice letters were mailed to the Local and Regional bodies, adjoining landowners, the Public Service Board, Green Mountain Power, and State Agencies entitled to service on March 30, 2016. Applicant later discovered an error in the application materials in which the closest residence was inadvertently identified as 1,000 feet away when the closest residence was actually about 400 feet away. The landowner of the adjoining property brought this to Applicant's attention and, although not a substantial change, Applicant chose to reissue the 45-day notice on May 11, 2016 to correct the discrepancy. Viens pf. at 11; Exh. ORS-RV-5.

26. Applicant has met with community members throughout this process to discuss the Project and obtain feedback. On March 10, 2016, Applicant met with the Middletown Springs Selectboard to discuss the Project. On June 2, 2016, Applicant met with Middletown Springs in a special meeting noticed by the Town, with the Selectboard and Planning Commission members in attendance, to hear from local residents and property owners about the Project. Numerous community members attended to hear the proposal and ask questions. Applicant has continued to work with adjoining landowners and Town officials to maintain stakeholder involvement and answer any lingering questions. Viens pf. at 11.

27. The land on which the Project is proposed has not been identified for any land conservation purposes. Exh. ORS-MK-2.

28. Middletown Springs has identified two areas (Highland Conservation Areas and Lowland Conservation Areas) which respectively include important ridgelines and elevations above 1200 feet and areas adjacent to rivers and streams and within flood hazard areas. The Project site is not within either of these areas as depicted on the Future Land Use Plan within the Town Plan. Exh. ORS-MK-2.

29. The Rutland Regional Plan addresses land conservation from a broad perspective. The Future Land Use Plan for the region identifies "Development-Constrained Areas" which are described as having "significant limitations upon current or future development because of conservation easements, public ownership, or severe natural limitations. These include lands owned or overseen by the National Forest Service, the State of Vermont, or land trusts, as well as large tracts of land that are on slopes over 25% grade or are wetlands." This perspective on where land conservation measures should be focused is highly similar to the approach taken in the Middletown Springs Town Plan. The Project site does not fall into this land use designation. Exh. ORS-MK-2.

30. While both the local and regional plans have identified broad areas and generalized statements on land conservation measures, neither specifically identifies the project site nor the area within which it located as part of a formalized conservation strategy or process. Exh. ORS-MK-2.

31. The form of the project, its scale and the potential continued use of remaining lands within the project parcel to retain agricultural function, all limit the impact the Project will have on the orderly development of the region. Exh. ORS-MK-2.

32. The Project represents a land use form that does not preclude long-term reuse of the property following the decommissioning of the facility. Exh. ORS-MK-2.

33. The Project will not create an undue adverse impact on the orderly development of the region. Exh. ORS-MK-2.

30 V.S.A. § 248(b)(2) – Need for Present and Future Demand for Service

34. Pursuant to Board Rule 5.108(B), this criterion has been conditionally waived for this Project and no party presented any testimony that would warrant rescinding that waiver in this proceeding.

30 V.S.A. § 248(b)(3) – System Stability and Reliability

35. The Project will not adversely affect system stability and reliability. This finding is supported by the following findings.

36. Applicant has applied for interconnection with GMP and received a formal response that it passed Rule 5.500 criteria and Fast Track analysis for interconnection. Viens pf. at 14; Exh. ORS-RV-6.

37. As determined by GMP, the Project will not have an adverse impact on GMP's system stability or reliability and no further studies are necessary. Viens pf. at 14; Exh. ORS-RV-6.

38. Applicant will execute an interconnection agreement prior to interconnection and commercial operation of the facility. Viens pf. at 14.

39. Some upgrades of the distribution line are required to interconnect the facility. These upgrades consist of the replacement of approximately three (3) existing poles and approximately 1,700' of single phase wire extending west from Orchard Road along Wescott Road to the Project; 3-phase wire will be installed. In addition, a new pole location will

support three pole-mounted transformers at the point of interconnection. Viens pf. at 14-15; Exh. ORS-RV-2.

40. Applicant will be responsible for all upgrades required to interconnect the Project. Viens pf. at 14.

30 V.S.A. § 248(b)(4) – Economic Benefit to the State

41. Pursuant to Board Rule 5.108(B), this criterion has been conditionally waived for this Project and no party presented any testimony that would warrant rescinding that waiver in this proceeding.

30 V.S.A. § 248(b)(5) – Aesthetics, Historic Sites, Air and Water Purity, the Natural Environment and Public Health and Safety

42. The Project will not have an undue adverse effect on aesthetics, historic sites, air and water purity, the use of natural resources, the natural environment, or public health and safety, with due consideration having been given to the criteria specified in 10 V.S.A. § 1424a(d) and § 6086(a)(1) through (8) and 9(K), and greenhouse gas impacts. This finding is supported by the following findings under the appropriate subheadings, below.

10 V.S.A. § 1424a(d) – Outstanding Resource Waters

43. There are no Outstanding Resource Waters in the Project area and therefore the Project will have no adverse impact on Outstanding Resource Waters. Exh. ORS-DB-2.

10 V.S.A. § 6086(a)(1) – Water and Air Pollution

44. Pursuant to Board Rule 5.108(B), this criterion has been conditionally waived for this Project and no party presented any testimony that would warrant rescinding that waiver in this proceeding.

10 V.S.A. § 6086(a)(1)(A) – Headwaters

45. The Project is located in a headwater as its watershed area is less than 20 square miles. Exh. ORS-DB-2.

46. The Project area is below 1,500 ft in elevation and the watershed for the site is not for public water supplies and does not provide significant recharge to aquifers. The proposed Project will not result in a reduction of the quality of ground or surface waters in the area. Exh. ORS-DB-2.

47. The Project will have no adverse impact on headwater areas. Exh. ORS-DB-2.

Waste Disposal – 10 V.S.A. § 6086(a)(1)(B)

48. The operation of the Project will not generate solid wastes, will not involve the injection of waste materials into groundwater or wells, and will not generate sanitary waste or stormwater runoff from new impervious surface that would require treatment pursuant to a Vermont Department of Environmental Conservation (DEC) permit. Goddard pf. at 2.

49. The three Project transformers will be located on a GMP utility pole on Wescott Road. The transformers will utilize non-petroleum oil which biodegrades in the environment in the event of an accidental spill. Goddard pf. at 2.

50. The Project requires approximately 0.72 acres of vegetative clearing as shown on the site plan. The majority of the vegetation is low lying shrubs with medium sized trees scattered

throughout the shrubs. Where tree clearing will occur, all trees will be cut flush with the existing grade and stumps will remain in place outside of the fenced area. Cut trees and branches will be ground and used as mulch on site. Goddard pf. at 2; Exh. ORS-RV-2.

51. The total soil disturbance during construction of this Project will be approximately 0.62 acres. This disturbance will be for construction of new infrastructure such as the access drive, equipment pads, underground utility lines, Project perimeter fence, proposed power poles, construction staging, solar module racking supports and miscellaneous other disturbances in upland areas. Goddard pf. at 3.

52. The Project will not be subject to an Agency of Natural Resources Construction Stormwater General Permit 9020 because less than one acre will be disturbed during construction. Goddard pf. at 3.

53. The proposed 12' wide permanent gravel access drive will be graded and improved with a gravel base from its existing intersection with Wescott Road to the Project site, which is a distance of approximately 175 feet. The finished grade of the new access road will match the existing grade. Goddard pf. at 3.

54. No changes to the topography are proposed. All topsoil that is excavated for construction of the access road will be stockpiled or spread on site for the life of the Project, to be returned to the site upon Project decommissioning. Any short-term temporary stockpiles during construction will be protected from erosion by silt fence and returned to the areas from which they came when the temporary construction improvements are removed. Goddard pf. at 3.

55. Stormwater runoff and erosion control methods that will be used during construction include temporary soil stabilization with mulch within 14 days of initial site disturbance, and permanent stabilization with topsoil, seed and mulch after final grading. Goddard pf. at 3.

56. The Project will be constructed in accordance with the Vermont Standards & Specifications for Erosion Prevention and Sediment Control, 2006. These are established and proven measures, accepted by ANR, to prevent erosion from occurring and treating stormwater runoff effectively before it reaches receiving waters. Implementation of these measures will prevent erosion and protect water quality. Goddard pf. at 4.

57. Construction of the Project will result in approximately 0.07 acres of new impervious surface after construction is complete. The new impervious surface is less than an acre; therefore, no operational phase stormwater management or permit is required. Goddard pf. at 4.

10 V.S.A. § 6086(a)(1)(C) – Water Conservation

58. Pursuant to Board Rule 5.108(B), this criterion has been conditionally waived for this Project and no party presented any testimony that would warrant rescinding that waiver in this proceeding.

10 V.S.A. § 6086(a)(1)(D) – Floodways

59. The site of the proposed Project is not located within a 100-year flood hazard area (zone A). Exh. ORS-DB-2.

60. The proposed Project is not located within a floodway or a floodway fringe and will not restrict or divert the flow of floodwaters or significantly increase the peak discharge of a river or stream within or downstream from the area of development. Exh. ORS-DB-2.

61. The closest FEMA flood hazard zone and river corridor is approximately 1,400' to the north of the Project and associated with the Poultney River. The Project will have no impact on floodways or river corridors. Exh. ORS-DB-2.

62. The Project will have no impact on floodways or river corridors. Exh. ORS-DB-2.

10 V.S.A. § 6086(a)(1)(E) – Streams

63. There are no surface waters within the Project area. Exh. ORS-DB-2.

64. The closest stream is an unnamed tributary to the Poultney River, approximately 1,300' from the Project. The Project will result in no cutting or clearing of vegetation within 50' of the top of bank of surface water resources. Therefore, the Project will have no adverse impact on streams. Exh. ORS-DB-2.

10 V.S.A. § 6086(a)(1)(F) – Shorelines

65. The site of the proposed Project is not located on a shoreline of a river, lake or pond. Exh. ORS-DB-2.

66. The closest shoreline is that of the Poultney River, 1500' north of the proposed Project. The Project will not result in any clearing of forest vegetation along the shore of the Poultney River. As a result, the proposed Project will result in no impacts to shorelines. Exh. ORS-DB-2.

10 V.S.A. § 6086(a)(1)(G) – Wetlands

67. The closest mapped Class 2 wetland is approximately 750' to the northeast of the Project area. There are no mapped hydric soils on or in the vicinity of the Project site. Exh. ORS-DB-2.

68. As there are no wetlands on the Project site, the Project will have no adverse impact on wetland resources. Exh. ORS-DB-2.

10 V.S.A. § 6086(a)(2), (3) – Sufficiency of Water; Burden on Existing Water Supply

69. Pursuant to Board Rule 5.108(B), these criteria have been conditionally waived for this Project and no party presented any testimony that would warrant rescinding that waiver in this proceeding.

10 V.S.A. § 6086(a)(4) – Soil Erosion

70. Based on the findings made under Waste Disposal, above, the Project will have no undue adverse impact on soil erosion because earth disturbance is very limited. Goddard pf. at 4-5.

71. The Project does not trigger the need for a State of Vermont Construction General Permit as the total soil disturbance during construction of this Project will be approximately 0.62 acres, and appropriate erosion control measures will be implemented following the Vermont Low Risk Site Handbook for Erosion Prevention and Sediment Control, August 2006. Goddard pf. at 4.

72. Further, the Project will have minimal impact on landform cover. The Project proposes only 0.07 acres of proposed new impervious surface on an approximately 5-acre site. The low amount of new impervious surface in conjunction with the proposed re-vegetation of the staging area disturbance will result in the Project having no adverse impact on the capacity of the land to retain water. Goddard pf. at 4.

10 V.S.A. § 6086(a)(5) – Transportation Systems

73. Under Board Rule 5.108(B), this criterion relates only to the construction phase of the Project.

74. The Project will not cause unreasonable congestion or unsafe conditions with respect to transportation systems. Viens pf. at 15.

75. Access to the site will be via Route 140, Orchard Road, and Wescott Road using the existing point of entry and the extended access drive. During construction, approximately 8 +/- tractor trailers will deliver modules, racking, and inverters to the site via the access point off of Wescott Road. Following initial delivery, construction related traffic will be limited to more infrequent deliveries for smaller, necessary electrical supplies and workers entering and exiting the site. Viens pf. at 15-16.

76. During operation of the Project, entry to the Project will be limited to maintenance and repairs, and therefore there will be only occasional Project-related traffic that will not cause unreasonable traffic or unsafe conditions. Viens pf. at 16.

10 V.S.A. § 6086(a)(6) – Educational Services

77. Pursuant to Board Rule 5.108(B), this criterion has been conditionally waived for this Project and no party presented any testimony that would warrant rescinding that waiver in this proceeding.

10 V.S.A. § 6086(a)(7) – Municipal Services

78. Pursuant to Board Rule 5.108(B), this criterion has been conditionally waived for this Project and no party presented any testimony that would warrant rescinding that waiver in this proceeding.

10 V.S.A. § 6086(a)(8) – Aesthetics, Historic Sites, and Rare and Irreplaceable Natural Areas

79. The Project will not have an undue adverse impact on the scenic or natural beauty of the area, aesthetics, historic sites, or rare and irreplaceable natural areas. This finding is supported by the following findings.

Visual Aesthetics

80. The Project sits on a broad hillside south of Route 140 about 1.5 miles west of the village of Middletown Springs. The site is elevated approximately 190' to 250' above Route 140 and the Poultney River, which lie in the valley at the base of the hill. A taller mountain range/hillside running north-south sits to the west and serves as a backdrop to the project site. The Project site slopes downward about 60' in grade towards the northeast and Route 140. The land along Route 140 is characterized by open agricultural fields and farmland, with clusters of farm buildings and residential properties. Exh. ORS-MK-2.

81. Due to the topography and existing vegetation, the Project is generally screened from the majority of public vantage points and residences. Exh. ORS-MK-2.

82. There are two areas of high visibility along Route 140 and Wescott Road and several areas of low/intermittent visibility. All other areas of public roadways surrounding the Project should have little to no visibility of the Project. In areas of higher visibility, there is little interrupting vegetation and relatively open views of the Project in the background from Route 140 and in the peripheral fore to middleground from Wescott Road. In areas of relatively low visibility, there is generally existing vegetation that would filter, and partially obscure, the view of the Project providing limited views of portions of the Project. These views would also occur in the background from Route 140and middleground viewing distance from Orchard Road. Exh. ORS-MK-2.

83. There are several residential properties in the vicinity of the Project that may have views of the Project, predominantly from the opposite hillside north of Route 140. The nearest residences across the valley are approximately 3,000' away. The residential clusters have intermittent views of the Project as the topography and existing vegetation both near the project site and near the residences will interrupt clear views of the Project. In addition, the residences will be looking predominantly at either the rear or sides of the panels from the northern and northeastern vantage points. There is also a seasonal cabin west of the project site on Wescott Road that is approximately 400 feet away from the panels. The cabin is oriented to the northeast towards the valley view, however, the project site including the panels, transformers, and equipment would be seasonally visible to the east during leaf-off conditions. During the spring and summer months during leaf-out, the project site will be minimally visible. Additionally, there is an undeveloped parcel of land immediately abutting the western project boundary. Exh. ORS-MK-2.

84. The Project will not result in a long-term loss of open space in the region. The Project site is not identified for conservation in the Town or Regional Plans. The components of the Project (panels, fencing, and transformers) can be easily removed and the land restored swiftly. Exh. ORS-MK-2.

85. The Project does alter the existing conditions and use of the site. While the hillside where the Project sits is scenic and the Project is visible for a portion of Route 140 while traveling west, the Project is a small portion of a much broader scenic view of the hillside and range. Existing vegetation both on the project site, in the middleground, and along the roadway help to screen portions of the Project. Exh. ORS-MK-2.

86. The Project impact on Wescott Road and the surrounding properties is greater due to the proximity, but the Project is generally set well back from public views and existing vegetation

is being maintained between the Project and the surrounding roads and properties. The Project meets and exceeds the minimum required setbacks from public roads and property lines. The panels are a minimum 135' from Wescott Road, 140' from the western property line, and 400' to Orchard Road to the east. Exh. ORS-MK-2.

87. The Project does create an adverse aesthetic impact on the visual resources, but the impact is not unduly adverse. Exh. ORS-MK-2.

88. The Project would not violate any clearly written community standard in the Town Plan or Regional Plan on which the potential aesthetic impacts of the Project could be applied. The proposed use is of a scale and form that is visually compatible with the area and represents a land use form that does not preclude long-term reuse of the property following the decommissioning of the facility. Exh. ORS-MK-2.

89. The Project has taken steps, integral to the site selection and design of the facility, which help minimize its visual impact and improve its harmony with the visual context, and a landscape mitigation plan has been proposed to improve the harmony of the Project with respect to its surroundings and provide additional project screening. Mitigation for the Project is intended to supplement the existing vegetation located both on-site and within the immediate area that already provides some screening of the Project. These plantings will be field located on site in coordination with the existing orchard trees to remain and in consideration of the views towards the Project. Exh. ORS-MK-2.

90. With the Mitigation Planting, the Project has taken generally available mitigating steps that a reasonable person would take to improve the harmony of the Project with its surroundings. Exh. ORS-MK-2.

91. The Project would not offend the sensibilities of the average person. Its scale, mass and form are not so out of character that they are offensive nor do they diminish or distract from the scenic qualities of the area. Within the broader landscape, the Project does not alter the existing scenic qualities. Exh. ORS-MK-2.

92. Based on the above findings, the Project does not create an undue adverse impact to the aesthetics or scenic beauty of the area. Exh. ORS-MK-2.

Noise

93. The Project will not result in any undue aesthetic impacts due to noise. Goddard pf. at 5; Exh. ORS-SDG-2.

94. Operational noise will be produced by two sources: the inverters and transformers. The maximum sound levels generated by the equipment, based upon the manufacturers' specifications, are as follows: 65 dBA at a 1-meter distance for the 21 (20kW/24kW) inverters and 55 dBA at a 1-meter distance for the 167 kVA pole mounted transformers. Final inverter selection will be made after permitting and prior to construction, but this noise modeling reflects one of the loudest possible inverter selections that could be made. Goddard pf. at 5; Exh. ORS-SDG-2.

95. The closest off-site residence is approximately 400 feet from the closest solar module. After combining all transformer and inverter operational noise, and accounting for the attenuation of sound over distance, it is estimated that this Project will produce a maximum noise level at the nearest residence of 32 dBA during daylight hours and 14 dBA during nighttime hours. Goddard pf. at 5; Exh. ORS-SDG-2.

Historic sites

96. The Project will not have an undue adverse impact on historic sites.

97. Applicant discussed the Project with Scott Dillon from the Vermont Division for Historic Preservation ("VDHP"). Scott Dillon visited the site and reviewed for the potential effect on historic sites and archaeologically sensitive areas; none were identified. Viens pf. at 15.

98. VDHP has provided a draft letter summarizing its conclusion that the Project will have no effect on any historic sites. Applicant understands that VDHP intends to submit a final copy of the letter provided to the Public Service Board after the Application is submitted. Viens pf. at 15; Exh. ORS-RV-7.

99. Based on VDHP's determination, the Project will not have an undue adverse effect on any historic resources. Applicant understands that VDHP intends to submit a final copy of the letter provided to the Public Service Board after the Application is submitted.

RINA

100. There are no rare and irreplaceable natural areas present within the Project site or the immediate vicinity, and thus the Project will have no impacts on any rare and irreplaceable natural areas. Exh. ORS-DB-2.

10 V.S.A. § 6086(a)(8)(A) – Necessary Wildlife Habitat

101. The Project will not have an adverse impact on necessary wildlife habitat, or rare threatened or endangered species based on the following findings.

102. There are no VT Fish and Wildlife Department mapped white-tailed deer winter habitats in the Project area and field investigation with the VT Fish and Wildlife Department confirmed the absence of deer wintering habitats in the Project area. Exh. ORS-DB-2.

103. The old field comprising the Project site does not provide habitat for the black bear and no sign of black bear was found at the proposed site. Exh. ORS-DB-2.

104. There are no records or occurrences of Rare, Threatened or Endangered species in or directly near the Project site. The closest recorded occurrences of RTE species are approximately 1,500' to the north of the Project site. Exh. ORS-DB-2.

105. The proposed Project will result in minimal clearing (0.7 acres) of old field shrubby vegetation, constituting less than 1% of the available forestland within 1 square mile of the Project. According to VT Fish and Wildlife Department standards, the proposed clearing is minimal in nature and acoustic bat surveys and restrictions on time of year of tree cutting are not necessary. Exh. ORS-DB-2.

106. The Project is not in an area known to provide summer roosting habitat for Indiana bat, no old or abandoned buildings potentially providing roosting habitat for little brown bat are proposed for demolition, and there are no known bat hibernacula or maternity roosts within 1 mile of the Project site. Exh. ORS-DB-2.

107. Given the current site conditions, the Department of Fish and Wildlife Natural Heritage Inventory program has concluded that it is unlikely that an RTE plant species would be present in the Project area. Exh. ORS-DB-2.

30 V.S.A. § 248(b)(5) – Prime Agricultural Soils

108. The proposed Project will primarily be located in an area where soils have not been designated Statewide Agricultural soils with primary significance. Exh. ORS-DB-2.

109. A small area (~3,500 sf) along the northeastern extent of the array and perimeter fence is located within designated Statewide Agricultural designated soils. This small area of

designated soils is isolated from the main agricultural field on the north side of Wescott Road. Exh. ORS-DB-2.

110. Per the plans of the Project, these soils will not be removed from the site. The soils will only be minimally displaced by the posts for the solar array support structures and by the piers for the enclosure foundations. Trenches for underground conduit will be excavated and then backfilled with native site material. Exh. ORS-DB-2.

111. There will be no permanent loss of the primary agricultural soils from the Project site. For these reasons, there will be no undue adverse impact on primary agricultural soils. Exh. ORS-DB-2.

10 V.S.A. § 6086(a)(9)(K) – Development Affecting Public Investments

112. The closest public investment to the Project site is Wescott Road, located to the North of the Project. Viens pf. at 16.

113. The Project will not impact or create any adverse burdens on this public investment given the limited and temporary use of the road during construction and operation. Therefore, there will be no adverse burden or endangerment of this public investment. Viens pf. at 16.

30 V.S.A. § 248(b)(5) – Public Health and Safety

114. Pursuant to Board Rule 5.108(B), this criterion has been conditionally waived for this Project and no party presented any testimony that would warrant rescinding that waiver in this proceeding.

115. Even if this condition were not waived, the Project has been designed such that there will not be undue adverse impacts to public health and safety. See findings above.

30 V.S.A. § 248(b)(5) – Greenhouse Gas Emissions

116. Pursuant to Board Rule 5.108(B), this criterion has been conditionally waived for this Project and no party presented any testimony that would warrant rescinding that waiver in this proceeding.

30 V.S.A. § 248(b)(6) – Integrated Resource Planning

117. Pursuant to Board Rule 5.108(B), this criterion has been conditionally waived for this Project and no party presented any testimony that would warrant rescinding that waiver in this proceeding.

30 V.S.A. § 248(b)(7) – Comprehensive Energy Plan

118. Pursuant to Board Rule 5.108(B), this criterion has been conditionally waived for this Project and no party presented any testimony that would warrant rescinding that waiver in this proceeding.

30 V.S.A. § 248(b)(9) – Waste-to-Energy Facility

119. Pursuant to Board Rule 5.108(B), this criterion has been conditionally waived for this Project and no party presented any testimony that would warrant rescinding that waiver in this proceeding. In any event, this solar project is not a waste-to-energy facility.

30 V.S.A. § 248(b)(10) – Transmission Facilities

120. Pursuant to Board Rule 5.108(B), this criterion has been conditionally waived for this Project and no party presented any testimony that would warrant rescinding that waiver in this proceeding.

30 V.S.A. § 248(b)(11) – Woody Biomass Facilities

121. Pursuant to Board Rule 5.108(B), this criterion has been conditionally waived for this Project and no party presented any testimony that would warrant rescinding that waiver in this proceeding.

IV. Conclusion

Based upon the evidence in the record, I conclude that the Project, subject to the conditions set forth in the Proposed Order and CPG below:

(a) will not unduly interfere with the orderly development of the region with due consideration having been given to the recommendations of the municipal and regional planning commissions, and the recommendations of the municipal legislative bodies;

(b) is a net metering system within the meaning of 30 V.S.A. § 219a(a)(3) and therefore, pursuant to Board Rule 5.108(B), review of this Project under the criterion of 30 V.S.A. § 248(b)(2) is conditionally waived;

(c) will not adversely affect system stability and reliability;

(d) is a net metering system within the meaning of 30 V.S.A. § 219a(a)(3) and therefore, pursuant to Board Rule 5.108(B), review of this Project under the criterion of 30 V.S.A. § 248(b)(4) is conditionally waived;

(e) will not have an undue adverse effect on the resources identified in 30 V.S.A. § 248(b)(5) and 10 V.S.A §§ 6086 (a)1(A)(headwaters), 1(B)(waste disposal), 1(D)(floodways), 1(E)(streams), 1(F)(shorelines), 1(G)(wetlands), 4(soil erosion), 8(aesthetics, historic sites, natural areas), and 8(A)(necessary wildlife habitat), and 9(K) (public facilities);

(f) is a net metering system within the meaning of 30 V.S.A. § 219a(a)(3) and therefore, pursuant to Board Rule 5.108(B), review of this Project under the criterion of 30 V.S.A § 248(b)(6) is conditionally waived;

(g) is a net metering system within the meaning of 30 V.S.A. § 219a(a)(3) and therefore, pursuant to Board Rule 5.108(B), review of this Project under the criterion of 30 V.S.A. § 248(b)(7) is conditionally waived;

(h) does not involve a facility affecting or located on any segment of the waters of the State that has been designated as outstanding resource waters by the Water Resources Board;

(i) is a net metering system within the meaning of 30 V.S.A. § 219a(a)(3) and therefore, pursuant to Board Rule 5.108(B), review of this Project under the criterion of 30 V.S. A. § 248(b)(9) is conditionally waived;

(j) is a net metering system within the meaning of 30 V.S.A. § 219a(a)(3) and therefore, pursuant to Board Rule 5.108(B), review of this Project under the criterion of 30 V.S.A. § 248(b)(10) is conditionally waived; and

(k) is a net metering system within the meaning of 30 V.S.A. § 219a(a)(3) and therefore, pursuant to Board Rule 5.108(B), review of this Project under the criterion of 30 V.S.A. § 248(b)(11) is conditionally waived.

Order

IT IS HEREBY ORDERED, ADJUDGED AND DECREED by the Public Service Board ("Board") of the State of Vermont that:

1. Construction, operation, and maintenance of the Project shall be in accordance with the plans and evidence as submitted in this proceeding. Any material deviation from these plans or substantial change to the Project must be approved in advance by the Board. Failure to obtain advance approval from the Board for a material deviation from the approved plans or substantial change to the Project may result in the assessment of a penalty pursuant to 30 V.S.A. §§ 30 and 247.
2. The net metering system shall comply with applicable existing and future statutory requirements and Board Rules and Orders.
3. In the event the Certificate of Public Good ("CPG") is transferred pursuant to Board Rule 5.100, Section 5.110 (D)(1), the new owner of the system must file the required certificate transfer form with the Board prior to commencing operation of the system.
4. Pursuant to 30 V.S.A. § 219a(d)(3), the installation of the net metering system shall be completed within one year of the date of the CPG unless otherwise ordered by the Board.
5. Prior to commencing construction or site preparation, ORS shall obtain all necessary permits and approvals. Construction, operation, and maintenance of the Project shall be in accordance with such permits and approvals.
6. Prior to commencing construction or site preparations, ORS shall file with the Board, the parties, and the Town of Middletown Springs, a letter stating that it has fulfilled all requisite CPG conditions, and that it intends to commence construction of the Project.

7. Prior to operation of the Project, ORS shall enter into an Interconnection Agreement with Green Mountain Power Corporation that conforms to the requirements of PSB Rule 5.500. ORS shall be responsible for the cost of GMP's electrical system upgrades reasonably necessary to implement interconnection of the Project, and such other costs appropriately submitted to ORS in accordance with Board Rule 5.500.
8. ORS shall restrict construction activities to the hours between 7:00 A.M. and 7:00 P.M. Monday through Friday and between 8:00 A.M. and 5:00 P.M. on Saturdays. No construction activities shall occur on Sundays or state or federal holidays.
9. At the time the Project permanently ceases to operate, ORS shall restore the site consistent with the testimony provided in this proceeding.

Dated at Montpelier, Vermont, this ___ day of _____, 2016.

_____	]	PUBLIC SERVICE BOARD
	]	OF VERMONT
_____	]	
	]	
_____	]	

OFFICE OF THE CLERK

FILED:

ATTEST: _____

Clerk of the Board

STATE OF VERMONT
PUBLIC SERVICE BOARD

Application of Orchard Road Solar I, LLC for a certificate of public good, pursuant to 30 V.S.A. §§ 219a and 248, to install and operate a 500 kW group net metered solar electric generation facility located on Orchard Road in Middletown Springs, Vermont, to be known as the "Orchard Road Solar Project"	)	CPG #NMP ____

Proposed
CERTIFICATE OF PUBLIC GOOD ISSUED
PURSUANT TO 30 V.S.A. § 248

IT IS HEREBY CERTIFIED that the Public Service Board of the State of Vermont ("Board") this day found and adjudged that the construction and operation of the proposed 500 kW group net metering facility in Middletown Springs, Vermont ("the Project"), in accordance with the evidence and plans submitted in this proceeding, will promote the general good of the State of Vermont, and a Certificate of Public Good is hereby issued to Orchard Road Solar I, LLC ("ORS"), subject to the following conditions.

1. Construction, operation, and maintenance of the Project shall be in accordance with the plans and evidence as submitted in this proceeding. Any material deviation from these plans or substantial change to the Project must be approved in advance by the Board. Failure to obtain advance approval from the Board for a material deviation from the approved plans or substantial change to the Project may result in the assessment of a penalty pursuant to 30 V.S.A. §§ 30 and 247.
2. The net metering system shall comply with applicable existing and future statutory requirements and Board Rules and Orders.
3. In the event the Certificate of Public Good ("CPG") is transferred pursuant to Board Rule 5.100, Section 5.110 (D)(1), the new owner of the system must file

the required certificate transfer form with the Board prior to commencing operation of the system.

4. Pursuant to 30 V.S.A. § 219a(d)(3), the installation of the net metering system shall be completed within one year of the date of the CPG unless otherwise ordered by the Board.
5. Prior to commencing construction or site preparation, ORS shall obtain all necessary permits and approvals. Construction, operation, and maintenance of the Project shall be in accordance with such permits and approvals.
6. Prior to commencing construction or site preparations, ORS shall file with the Board, the parties, and the Town of Middletown Springs, a letter stating that it has fulfilled all requisite CPG conditions, and that it intends to commence construction of the Project.
7. Prior to operation of the Project, ORS shall enter into an Interconnection Agreement with Green Mountain Power Corporation that conforms to the requirements of PSB Rule 5.500. ORS shall be responsible for the cost of GMP's electrical system upgrades reasonably necessary to implement interconnection of the Project, and such other costs appropriately submitted to ORS in accordance with Board Rule 5.500.
8. ORS shall restrict construction activities to the hours between 7:00 A.M. and 7:00 P.M. Monday through Friday and between 8:00 A.M. and 5:00 P.M. on Saturdays. No construction activities shall occur on Sundays or state or federal holidays.
9. At the time the Project permanently ceases to operate, ORS shall restore the site consistent with the testimony provided in this proceeding.

Dated at Montpelier, Vermont, this ____ day of _____, 2016.

_____	]	PUBLIC SERVICE BOARD
	]	OF VERMONT
_____	]	
	]	
_____	]	

OFFICE OF THE CLERK
FILED:
ATTEST: _____
Clerk of the Board

State of Vermont *Agency of Natural Resources*

Certificate of Public Good Application Fee Form

Use this form for applications filed **on or after** July 1, 2015

Title 30, Section 248b establishes fees for the purpose of supporting the role of the Agency of Natural Resources (the Agency) in reviewing applications for in-state facilities under Sections 248a and 248 of said title. When applying for Public Service Board (PSB) approval of an in-state facility under Sections 248a and 248, complete this form and provide a copy of the completed form and the fee payment to the Agency and a copy of the form to the PSB as part of the application.

Project Name: Orchard Road Solar Project
Street Address: 30 Orchard Road, Middletown Springs, VT
Description: 500 kW AC solar project
Applicant: Orchard Road Solar I, LLC
Date: 07/11/16

Fees shall be calculated as follows:

1. There shall be no fee for an electric generation facility less than or equal to 139kW in plant capacity* or for an application filed under subsection 248(k), (l), or (n) of Title 30.

2. The fee for **electric generation facilities greater than 139kW through five MW in plant capacity*** shall be calculated as follows, except that in no event shall the fee exceed $15,000:

   A. Electric generation facility from 140kW through 450kW: $3.00 per kW
   B. Electric generation facility from 451kW through 2.2MW: $4.00 per kW
   C. Electric Generation Facility from 2.201MW through 5MW: $5.00 per kW

Fee Calculator:

kW plant capacity*	X Rate ($3, $4 or $5)	= Fee (not to exceed $15,000)
500		$ 2,000.00

3. The fee for a **new electric generation facility greater than 5MW in plant capacity***, and for a **new electric transmission facility** or a **new natural gas facility** not eligible for treatment under subsection 248(j) of Title 30, shall be equal to $2.50 for each $1,000 of construction costs**, but in no event greater than $100,000.

Fee Calculator:

$ construction costs**	/ 1,000	X 2.50	= Fee (not to exceed $100,000)

Upon commissioning of the facility, complete a Certification of Actual Construction Costs form and submit to the Agency, per form instructions.

The fee for an **application under subsection 248(j) of Title 30 for a facility that is *not* electric generation** and for an application or that portion of an application under section 248 of Title 30 that consists of **upgrading an existing facility within its existing development footprint, reconductoring of an electric transmission line on an existing structure**, or **the addition of an electric transmission line to an existing structure**, shall be $2,500.

Fee Calculator:

Type of Project	Rate	= Fee
Non-electric generation project filed under 248(j)	$2,500	
Upgrading an existing facility within its existing development footprint	$2,500	
Reconductoring of an electric transmission line on an existing structure	$2,500	
The addition of an electric transmission line to an existing structure	$2,500	

---

4. The fee for an application under section **248a of Title 30 for telecommunications facilities that includes a new support structure**, shall be equal to $2.50 for each $1,000 of telecommunication facility construction costs***, but in no event greater than $15,000.

Fee Calculator:

$ construction costs***	/ 1,000	X 2.50	= Fee (not to exceed $15,000)

Upon commissioning of the facility, complete a Certification of Actual Construction Costs form and submit to the Agency, per form instructions.

TOTAL FEE	$ 2,000.00

I attest by my signature under 13 V.S.A Sec. 3016 (False Claim) that the above is true to the best of my knowledge:

SIGNATURE OF APPLICANT	CLEARLY PRINT NAME	DATE
	Ron Viens	7-11-16

Payment Information – For payment by check or money order, make payable to:

Vermont Agency of Natural Resources
Office of Planning and Legal Affairs
One National Life Drive, Davis 2
Montpelier, VT 05620-3905

For Electronic Payment:

TD Bank, 90 Main Street, Montpelier, VT 05602
ABA#: 011600033
Account #: 5240113051

^ For wire transfers, include a reference number and receipt of the transaction with this form.

For questions related to fee calculations or payment, or for additional information please contact:
ANR Office of Planning and Legal Affairs
ANR.Notice@vermont.gov
802-828-1295
http://www.anr.state.vt.us/site/html/OPLA.htm

DEFINITIONS:

*** Plant Capacity.** The rated electrical nameplate for a plant, except that, in the case of a solar energy plant, the term shall mean the aggregate AC nameplate capacity of all inverters used to convert the plant's output to AC power.

**** Construction Costs.** Estimated dollar value of project improvements including site preparation, buildings, roads, parking, facility components, equipment and installation, fencing, screening, stormwater infrastructure, etc.

***** Telecommunication Facility Construction Costs** calculated under 5 above do not include the antennae, related appurtenances, equipment for transmission and receipt of signals and materials design to conceal the antennas from view. They do include all construction costs associated with the installation of any new support structure and any ancillary buildings/structures, including related earthwork.

Exhibit ORS-SDG-1

KREBS & LANSING

Consulting Engineers, Inc.

SETH D. GODDARD

Vice President ✹ VT P.E. 55582

Mr. Goddard joined Krebs and Lansing in 2005 and became an owner in 2014. Mr. Goddard has worked on a variety of civil engineering designs, permitting, and construction services for many commercial, industrial, residential, and institutional civil site design projects. These projects include the design of roads, construction access roads, utility systems, storm control and treatment systems, onsite sanitary sewer systems, municipal sanitary sewer, domestic water supply, municipal water supply systems, mass earthworks, grading, and erosion control measures.

Mr. Goddard is well established and provides professional knowledge in civil engineering site and stormwater design, utility, and surveying. He has provided support for numerous projects under Section 248 review by the State of Vermont Public Service Board. ***Mr. Goddard has 10 years of professional experience.***

ERWR Whitcomb Solar Farm, LLC - *2.2 MW Solar Array*

- Civil site design for 2.2 MW solar array on a 15 acre site including stormwater design and Section 248 permit support.

CRL Solar, LLC - *2.2 MW Solar Array*

- Civil site design for 2.2 MW solar array on a 10 acre site including wetland permitting, Individual Construction Stormwater Discharge Permit and Section 248 permit support.

Westman GLC Solar, LLC - *500 kW Solar Array*

- Civil site design for 500 kW solar array and Section 248 Permit support.

Westman GLC Solar, LLC - *500 kW Solar Array*

- Civil site design for 500 kW solar array and Section 248 Permit support.

Kingdom Community Wind - *21 Wind Turbine Generators*
4 mile crane path, 2 mile access road and associated stormwater system

- Design of the crane paths, access road, substation and operations & maintenance building civil site improvements, coordination with electrical collector and transmission system designs, design of stormwater collection and treatment system including the State of Vermont high elevation renewable energy project credits, construction stormwater and Section 248 permit support.

Vermont Gas Systems, Inc. - various projects
Phase VI System Expansion, 4.1 mile 16" natural gas pipeline St. Albans and Georgia, Vermont.

Phase VII System Expansion, 3.8 mile 16" natural gas pipeline Georgia, Vermont. Currently in planning process.

EDUCATION Bachelor of Science in Civil Engineering
University of Vermont, Burlington, VT, 2005

PROFESSIONAL LICENSE & CERTIFICATION
Vermont Professional Engineer, No. 55582

seth.goddard@krebsandlansing.com ▪ 802-878-0375 ▪ Fax 802-878-9618
164 Main Street, Suite 201 ▪ Colchester, VT 05446

Exhibit ORS-SDG-2

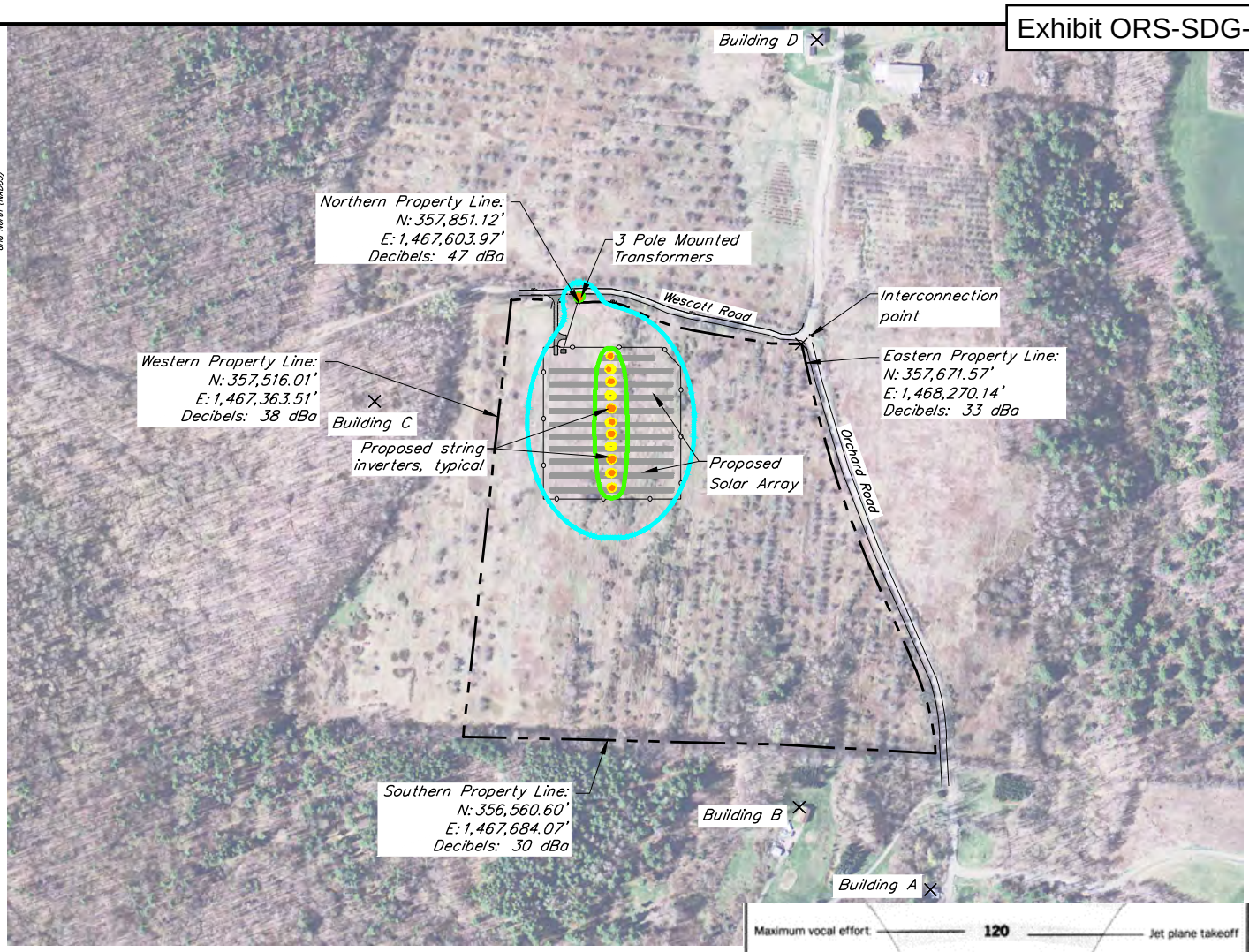

Notes:

1. Sound from inverters was measured in an ambient noise test on the Fronius Symo 20kW/24kW Inverters. Fronius specifies that the inverter creates 65 dBa in accordance with IEC 62109-1 which measures sound at a distance of 1 meter from the unit. Calculated sound level at 3 meters is 55.5 dBa. Sound levels for pole mounted transformers are a maximum of 55 dBa [measured at 0.3 meter, as per NEMA TR1 (ANSI/IEEE Std. C57.12-90-1993, sec. 13.3.4)]. Assuming 1 meter to be conservative calculated sound level at 3 meters is 45.5 dBa.

2. Other decibel ranges were derived using the following distance damping equation [L2 = L1 -20 Log(d1/d2)]. This damping equation was the only factor considered in decibel range attenuation estimates. Elevation, ambient noise, vegetation, proposed solar array and other structures which would further effect the attenuation of sound levels were not considered in this study. Sound levels depicted are for all (21) Fronius Symo 20kW/24kW inverters and (3) Cooper pole mounted transformers operating simultaneously at maximum noise level. See additional calculation information on Sound 2, Sound 3 & Sound 4.

3. Plans Sound 3 & Sound 4, run the calculations for nighttime operation. Site inverters make negligible noise when not loaded with power. For this calculation we assume the inverters will make no noise. The site transformers will still make some noise at night, to be conservative the nighttime calculation models the transformers running at maximum noise simultaneously.

4. Sound levels reported do not account for any background noise. Local background noise may exceed sound created by project equipment.

Legend:

- 70 dBa range
- 60 dBa range
- 50 dBa range
- 40 dBa range

0' 250' 500' 1,000'

GRAPHIC SCALE 1" = 500'

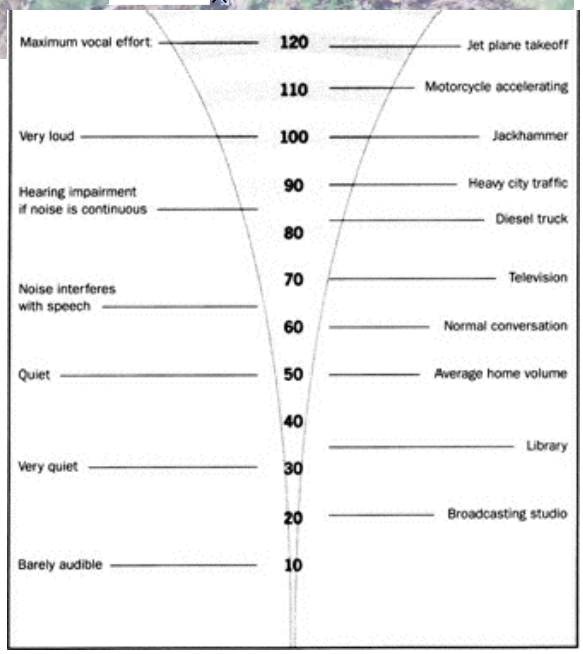

Decibel Breakdown Compared to Everyday Noises

Krebs & Lansing Consulting Engineers, Inc.
164 Main Street, Suite 201
Colchester, VT 05446
T: (802) 878-0375
F: (802) 878-9618
email@krebsandlansing.com

groSolar
205 Billings Farm Road, Building 4
White River Junction, VT 05001
www.grosolar.com

FULL DAYTIME OPERATION SOUND LEVEL PLAN

Basic Sound Level Estimates for Noise Produced by Transformers and Inverters

Project: ORCHARD ROAD SOLAR

Location: 30 Orchard Road, Middletown Springs, VT

Source Data:
Chart found at
www.soundinstitute.com/article_detail.cfm/ID/95

Plan ID: Sound 1

Scale: 1" = 500'

Date: 06/29/16

DRAWN BY: SDG

CHECKED BY: GTD

Revision Date:

Middletown Springs Project, 30 Orchard Road, Middletown Springs, Vermont - DAYTIME

Sound Source #	Easting (feet)	Northing (feet)	Noise Level (dBa @ 3 Meters)
Fronius Symo 20kW/24kWL (1-21)	See Plan	See Plan	55.5
167 kVA Pole Mounted Transformer (1)	1,467,602.59	357,865.33	45.5
167 kVA Pole Mounted Transformer (2)	1,467,598.79	357,869.22	45.5
167 kVA Pole Mounted Transformer (3)	1,467,606.39	357,869.22	45.5

Fronius Symo 20kW/24kW Inverter: Fronius specifies that the inverter creates 65 dBa in accordance with IEC 62109-1 which measures sound at a distance of 1 meter from the unit. Calculated sound level at 3 meters is 55.5 dBa.

Single-Phase Overhead Transformers 167kVA Cooper Power Systems specifies the units peak noise level as <45.5 dBa measured at 3 meters (Manufacturer specification is a maximum of 55 dBa measured at 0.3 meter, as per NEMA TR1 (ANSI/IEEE Std. C57.12-90-1993, sec. 13.3.4). Assuming 1 meter to be conservative the calculated sound level at 3 meters is 45.5 dBa.

Formulas used for Calculations

Adding of Noise Levels

$L_T = 10 \times \text{Log}_{10} (10^{L1/10} + 10^{L1/10} + ... + 10^{Ln/10})$

Where:

L_T = Total noise level of all equipment

Ln = Noise level for each piece of equipment

Noise Level Changes with Distance

Lb = La - 20 x Log10 (Db/Da)

Where:

Lb = Noise level at new distance

La = Noise level at original distance

Db = New distance from source of noise

Da = Original distance from source of noise

	1 meter	3 meter
Fronius Symo 20kW/24kW	65.000	55.458
167 kVA Pole Mounted Transformer	55.000	45.458

Points of Interest were chosen based on close proximity to the proposed project.

Points of Interest	Easting (feet)	Northing (feet)	Estimated Noise Level Based on Project Components (Sound Pressure, dBa)
Northern Property Line	1,467,603.97	357,851.12	47
Eastern Property Line	1,468,270.14	357,671.57	33
Southern Property Line	1,467,684.07	356,560.60	30
Western Property Line	1,467,363.51	357,516.01	38
Building A	1,468,637.85	356,119.83	24
Building B	1,468,250.61	356,362.75	27
Building C *Nearest Residence*	1,466,998.26	357,559.82	32
Building D	1,468,303.11	358,626.06	27

Krebs & Lansing Consulting Engineers, Inc.
164 Main Street, Suite 201
Colchester, VT 05446
T: (802) 878-0375
F: (802) 878-9618
email@krebsandlansing.com

groSolar
205 Billings Farm Road, Building 4
White River Junction, VT 05001
www.grosolar.com

FULL DAYTIME OPERATION SOUND LEVEL PLAN

Basic Sound Level Estimates for Noise Produced by Transformers and Inverters

Project: ORCHARD ROAD SOLAR

Location: 30 Orchard Road, Middletown Springs, VT

Source Data: *Chart found at www.soundinstitute.com/article_detail.cfm/ID/95*

Plan ID: Sound 2

Scale: N/A

Date: 06/29/16

DRAWN BY: SDG

CHECKED BY: GTD

Revision Date:

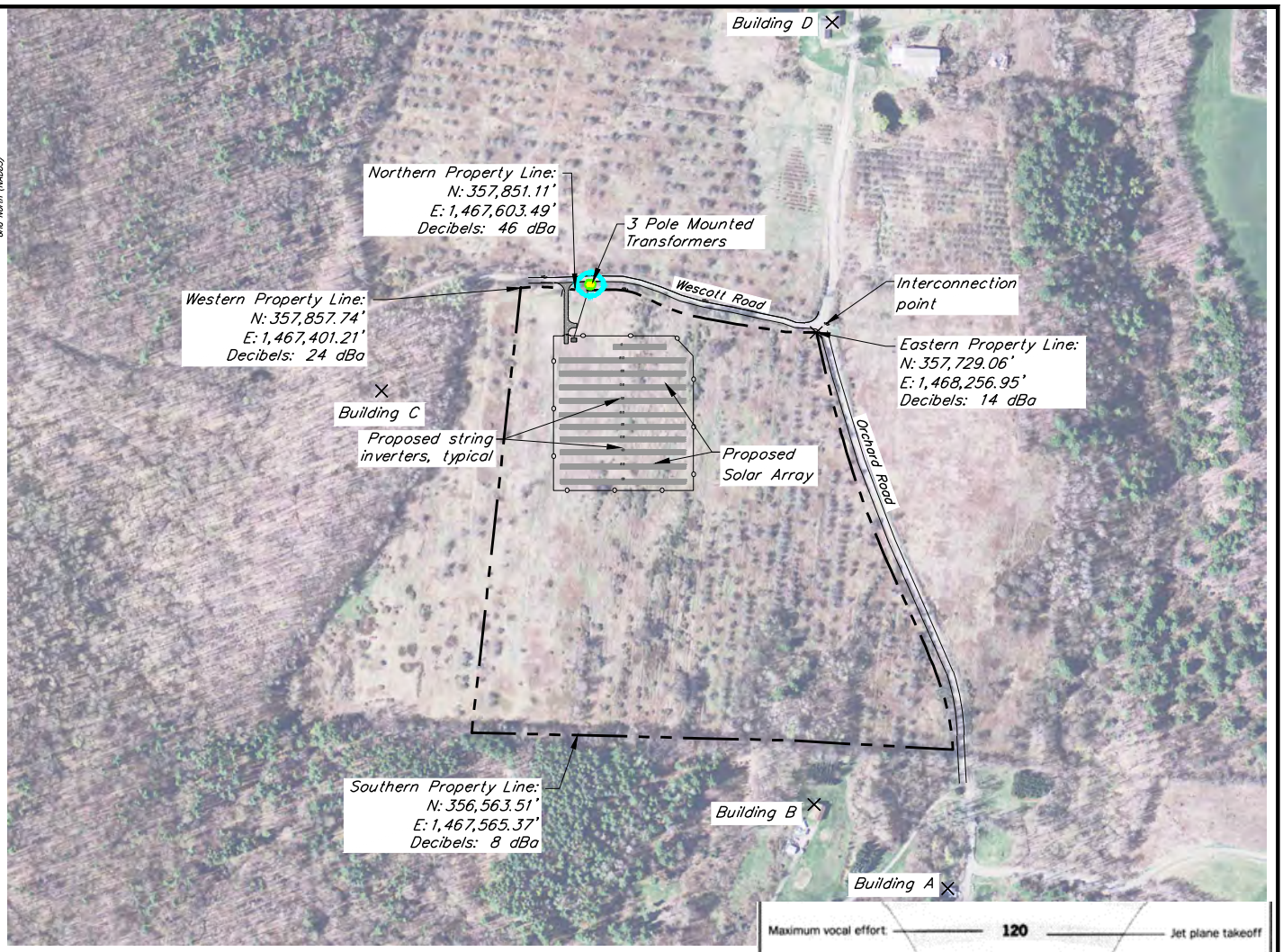

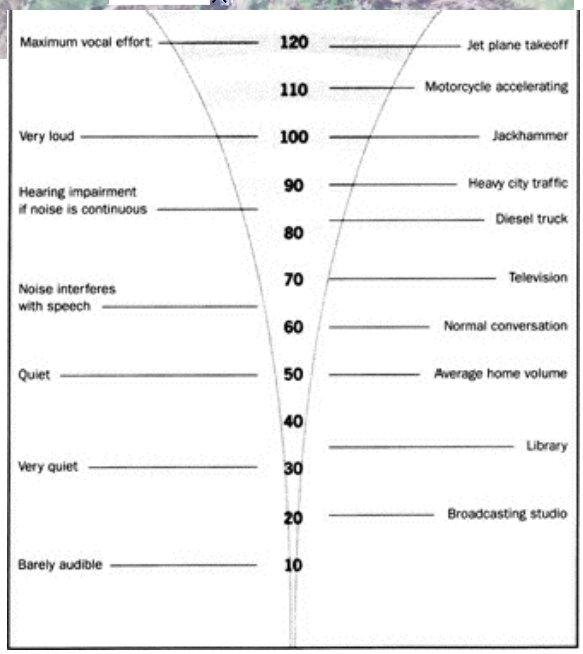

Decibel Breakdown Compared to Everyday Noises

Notes:

1. Sound levels for pole mounted transformers are a maximum of 55 dBa [measured at 0.3 meter, as per NEMA TR1 (ANSI/IEEE Std. C57.12-90-1993, sec. 13.3.4)]. Assuming 1 meter to be conservative calculated sound level at 3 meters is 45.5 dBa.

2. Other decibel ranges were derived using the following distance damping equation [L2 = L1 -20 Log(d1/d2)]. This damping equation was the only factor considered in decibel range attenuation estimates. Elevation, ambient noise, vegetation, proposed solar array and other structures which would further effect the attenuation of sound levels were not considered in this study. Sound levels depicted are for the (3) Cooper Pole Mounted 167kVA Transformers operating simultaneously at maximum noise level.

3. Sound levels reported do not account for any background noise. Local background noise may exceed sound created by project equipment.

Legend:

- 70 dBa range
- 60 dBa range
- 50 dBa range
- 40 dBa range

0' 250' 500' 1,000'

GRAPHIC SCALE 1" = 500'

Krebs & Lansing Consulting Engineers, Inc.
164 Main Street, Suite 201
Colchester, VT 05446
T: (802) 878-0375
F: (802) 878-9618
email@krebsandlansing.com

groSolar
205 Billings Farm Road, Building 4
White River Junction, VT 05001
www.grosolar.com

NIGHTTIME OPERATION SOUND LEVEL PLAN

Basic Sound Level Estimates for Noise Produced by Transformers

Project: ORCHARD ROAD SOLAR

Location: 30 Orchard Road, Middletown Springs, VT

Source Data:
Chart found at
www.soundinstitute.com/article_detail.cfm/ID/95

Plan ID: Sound 3

Scale: 1" = 500'

Date: 06/29/16

DRAWN BY: SDG

CHECKED BY: GTD

Revision Date:

Middletown Springs Project, 30 Orchard Road, Middletown Springs, Vermont - NIGHTTIM

Sound Source #	Easting (feet)	Northing (feet)	Noise Level (dBa @ 3 Meters)
167 kVA Pole Mounted Transformer (1)	1,467,602.59	357,865.33	45.5
167 kVA Pole Mounted Transformer (2)	1,467,598.79	357,869.22	45.5
167 kVA Pole Mounted Transformer (3)	1,467,606.39	357,869.22	45.5

Single–Phase Overhead Transformers 167kVA Cooper Power Systems specifies the units peak noise level as <45.5 dBa measured at 3 meters (Manufacturer specification is a maximum of 55 dBa measured at 0.3 meter, as per NEMA TR1 (ANSI/IEEE Std. C57.12–90–1993, sec. 13.3.4). Assuming 1 meter to be conservative the calculated sound level at 3 meters is 45.5 dBa.

Formulas used for Calculations

Adding of Noise Levels

$L_T = 10 \times \text{Log}_{10} (10^{L1/10} + 10^{L1/10} + ... + 10^{Ln/10})$

Where:

L_T = Total noise level of all equipment

Ln = Noise level for each piece of equipment

Noise Level Changes with Distance

Lb = La - 20 x Log10 (Db/Da)

Where:

Lb = Noise level at new distance

La = Noise level at original distance

Db = New distance from source of noise

Da = Original distance from source of noise

	1 meter	3 meter
167 kVA Pole Mounted Transformer	55.000	45.458

Points of Interest were chosen based on close proximity to the proposed project.

Points of Interest	Easting (feet)	Northing (feet)	Estimated Noise Level Based on Project Components (Sound Pressure, dBa)
Northern Property Line	1,467,603.49	357,851.11	46
Eastern Property Line	1,468,256.95	357,729.06	14
Southern Property Line	1,467,565.37	356,563.51	8
Western Property Line	1,467,401.21	357,857.74	24
Building A	1,468,637.85	356,119.83	4
Building B	1,468,250.61	356,362.75	6
Building C *Nearest Residence*	1,466,998.26	357,559.82	14
Building D	1,468,303.11	358,626.06	10

Krebs & Lansing Consulting Engineers, Inc.
164 Main Street, Suite 201
Colchester, VT 05446
T: (802) 878-0375
F: (802) 878-9618
email@krebsandlansing.com

groSolar
205 Billings Farm Road, Building 4
White River Junction, VT 05001
www.grosolar.com

NIGHTTIME OPERATION SOUND LEVEL PLAN

Basic Sound Level Estimates for Noise Produced by Transformers

Project: ORCHARD ROAD SOLAR

Location: 30 Orchard Road, Middletown Springs, VT

Source Data: *Chart found at www.soundinstitute.com/article_detail.cfm/ID/95*

Plan ID: Sound 4

Scale: N/A

Date: 06/29/16

DRAWN BY: SDG

CHECKED BY: GTD

Revision Date:

Effective March 2014
Supersedes August 2013

Single-phase overhead transformers

General

Eaton's Cooper Power Systems manufactures a complete line of single-phase overhead-type distribution transformers. Single-phase transformers are available as conventional (5-167kVA), completely self-protected (CSP 5-75kVA), or MagneX™ interrupter-protected (5-167kVA) in a variety of ratings to meet or exceed the requirements of applicable ANSI® and NEMA® standards. Units designed per Rural Utilities Service (RUS) standards are also available.

CSP transformers have direct connected primary arresters, secondary circuit breakers, and internal primary voltage fuses. This eliminates the need for separately mounted protective devices and provides reduced installation costs.

The MagneX interrupter is an overcurrent protective device that protects distribution transformers from damaging overloads and secondary faults, and is also used for switching the transformer "on" or "off."

Transformers shown include, first and second, single-phase overhead conventional transformers, and third, MagneX interrupter-protected transformer.

Cooper Power Systems
by EATON

Standard features

- Meet or exceeds ANSI® and NEMA® standards
- Meets DOE Energy Efficiency Standard 10 CFR Part 431 for distribution transformers
- EPRI recommended interlaced core-type design (5-75 kVA)
- Tank coating exceeds IEEE Std C57.12.31™-2010 standard
- Cover with a minimum dielectric strength of 8 kV
- Tin-plated high and low-voltage bushing terminals to accommodate aluminum or copper conductors
- Laser-engraved nameplate
- Wet process porcelain high-voltage bushings resistant to high-voltage corona
- Tank grounding provisions
- Envirotemp™ FR3™ fluid or electrical grade mineral oil
- Heavy-duty lifting lugs and hanger brackets per ANSI® requirements1
- Visible cover ground on units with cover-mounted bushings
- Recessed tank bottom that offers protection when sliding over rough surfaces
- Automatic pressure relief device
- Polymer low-voltage bushings (5-75 kVA)
- Arrester mounting and grounding provisions
- Internal mark indicating the proper oil level
- Permanently stamped secondary leads to ensure proper identification
- Corrosion-resistant cover band
- Quality System ISO 9001 certified

Optional accessories

- Taps either two 2.5 % above and below; four 2.5% below; NEMA® taps or special taps
- Externally-operable tap changer switches for safe operation
- Multiple voltage primaries (5-75kVA)
- Externally-operable multiple voltage switches for safe operation
- High corrosion area protection with 304 or 409 stainless steel hardware and tanks
- MagneX™ interrupter
- Birdguards
- Envirotemp™ FR3™ fluid where less-flammable fluid is required and superior environmental characteristics are desired
- Cover with a minimum dielectric strength of 15 kV
- Extra creep high voltage bushings (up to 150 kV BIL)
- Porcelain low-voltage bushings
- Canadian Standards Association (CSA) conforming design
- Special designs conforming to international specifications
- Drain/sampling valve
- Pressure vacuum gauge (tank size limitations apply)
- Filter press connections
- Temperature gauge (tank size limitations apply)
- Liquid level gauge (tank size limitations apply)
- High efficiency transformers at 0.05% or higher above DOE efficiency

[1]Lugs and brackets per ANSI requirements up to 4500 lbs.

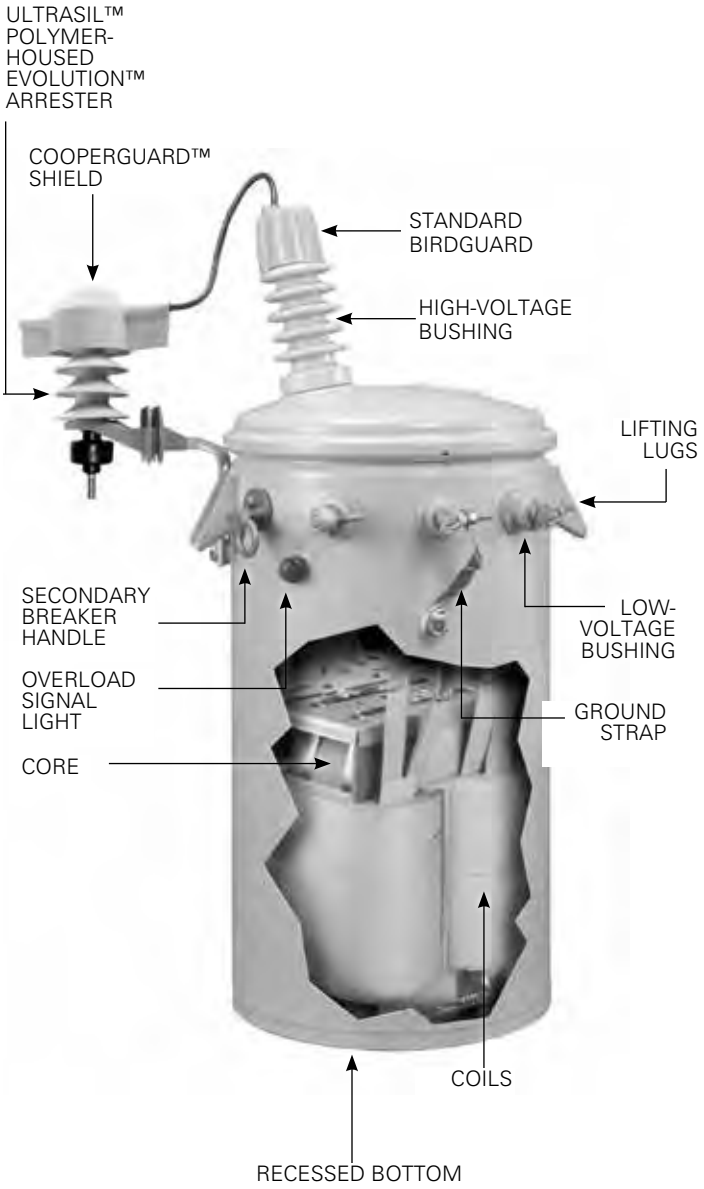

Figure 1. Single-phase overhead CSP transformer.

Single-phase overhead conventional

Product Scope:
kVA: 5-167
Primary Voltage: 2400-19,920 V
Secondary Voltage: 120-600 V

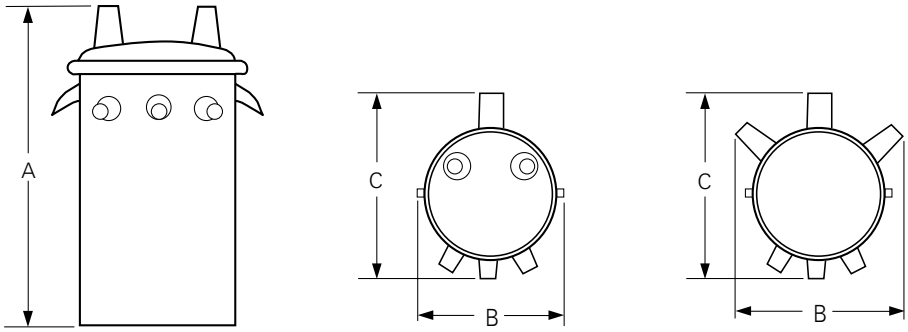

≥95 kV BIL ≤75 kV BIL[1]

Table 1. Typical dimensions and Weights[2,3]

	Dimensions (in.)							
	"A"				"B"			
kVA	≤75 kV BIL	95 kV BIL	125 kV BIL	150 kV BIL	≤75 kV BIL	≥95 kV BIL	"C"[1]	Approx. Weight (lbs.)
5	26	32	42	45	28[1]	17	20	220
10	26	32	42	45	28[1]	17	20	220
15	30	35	46	49	28[1]	17	20	280
25	31	38	48	51	30[1]	20	22	350
37.5	33	40	52	55	31[1]	20	24	450
50	36	44	52	55	33[1]	22	25	600
75	39	51	54	57	33[1]	24	28	820
100	40	55	58	61	33[1]	27	31	1100
167	47	55	58	61	35[1]	35	37	1400

[1] Includes sidewall mount H.V. bushings.
[2] Includes radiators.
[3] Weights, gallons of fluid and dimensions are for reference only, and not for construction. Please contact Eaton's Cooper Power Systems for exact dimensions.

Single-phase overhead completely self protected (CSP)

Product Scope:
kVA: 5-75
Primary Voltage: 2400-19,920 V
Secondary Voltage: 120-600V

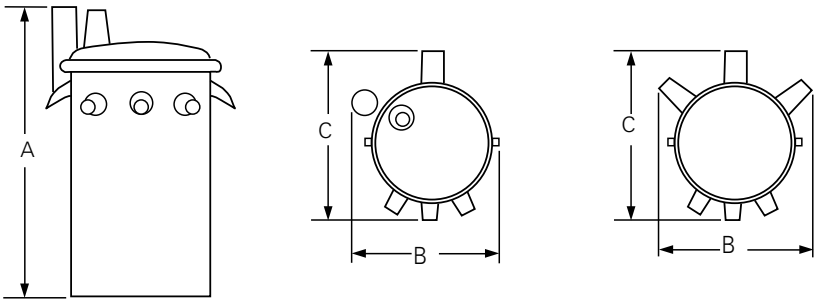

≥95 kV BIL ≤75 kV BIL[1]

Table 2. Typical Dimensions and Weights[2,3]

	Dimensions (in.)							
	"A"				"B"			
kVA	≤75 kV BIL	95 kV BIL	125 kV BIL	150 kV BIL	≤75 kV BIL	≥95 kV BIL	"C"1	Approx Weight (lbs.)
5	26	36	42	45	28[1]	17	20	240
10	26	36	42	45	28[1]	17	20	240
15	30	42	46	49	28[1]	17	20	300
25	31	44	48	51	30[1]	20	22	400
37.5	33	46	52	55	31[1]	20	25	500
50	36	46	52	55	33[1]	22	26	600
75	39	51	54	57	33[1]	24	30	900
100[4]	40	55	58	61	33[1]	27	34	1100
167[4]	47	55	58	61	35[1]	35	40	1600

[1] Includes sidewall mount H.V. bushings.
[2] Includes Radiators
[3] Weights, gallons of fluid and dimensions are for reference only, and not for construction. Please contact Eaton's Cooper Power Systems for exact dimensions.
[4] MagneX interrupter Only

Protection options

- High fire point Envirotemp™ FR3™ fluid for increased fire safety
- Secondary breaker with weak link for secondary fault and overload protection (5-75 kVA)
- Primary weak link fuse
- Current-limiting fuse for high interrupting ratings and limiting fault currents
- Low-voltage distribution class MOV arrester – internally or externally mounted
- MagneX interrupter (Primary Breaker) with isolation link
- MagneX interrupter (Primary Breaker) with partial range current-limiting fuse
- Lightning arresters for primary over-voltage protection: direct connected, normal or heavy duty metal oxide varistor (MOV) either internal (VariSTAR™), or external UltraSIL Polymer-Housed Evolution or UltraSIL™ Polymer-Housed VariSTAR arrester with polymer housing.

Quality control

Single-phase overhead-type transformers manufactured by Cooper Power Systems provide outstanding performance. All transformers from Cooper Power Systems pass tests as prescribed by ANSI® prior to shipment. Cores and coils are designed for high reliability and low field failure rates. The domed cover design in conjunction with the formed cover band provides increased pressure withstand capability, eliminates bushing overhang and improves cover retention. The high-voltage bushing design improves gasket protection and seal. The low-voltage polymer bushing virtually eliminates ultraviolet deterioration with its captured gasket, compression-limiting design. Transformers are designed and manufactured to be corrosion-resistant. Special attention is given to all welded external parts, to avoid moisture entrapment that can lead to corrosion problems. The recessed bottom design, as well as the stainless steel cover band ends, provide corrosion protection in areas that are more susceptible to coating damage during handling. All coating systems exceed IEEE Std C57.12.31™-2010 standard.

The Quality System at Eaton's Cooper Power Systems Transformer Products is ISO 9001 certified.

Fluid options

Transformers can be filled with standard electrical grade mineral insulating oil, Envirotemp™ FR3™ fluid, or other dielectric coolants.

For fire-sensitive locations, Envirotemp™ FR3™ fluid, a fire resistant natural ester-based fluid is recommended. Envirotemp™ FR3™ fluid also offers the benefits of a soy oil-based dielectric coolant that is sustainable and has unique environmental and material properties in addition to increased fire safety over conventional mineral oil.

Check with Eaton's Cooper Power Systems for the availability of other dielectric coolants in single-phase, pad-mounted transformers.

Eaton
1000 Eaton Boulevard
Cleveland, OH 44122
United States
Eaton.com

Eaton's Cooper Power Systems Business
2300 Badger Drive
Waukesha, WI 53188
United States
Cooperpower.com

© 2014 Eaton
All Rights Reserved
Printed in USA
Publication No. 201-10

Eaton, Cooper Power Systems, MagneX, VariSTAR, UltraSIL, Evolution, and CooperGuard are trademarks of Eaton in the U.S. and other countries. You are not permitted to use these trademarks without the prior written consent of Eaton.
IEEE Std. C57.12.31™-2010 standard is a trademark of the Institute of Electrical and Electronics Engineers, Inc., (IEEE). This product is not endorsed or approved by the IEEE.
Envirotemp™ and FR3™ are licensed trademarks of Cargill, Incorporated.
NEMA® is a registered trademark of the National Electrical Manufacturers Association.
ANSI® is a registered trademark of the American National Standards Institute.

Powering Business Worldwide

For Eaton's Cooper Power Systems single-phase overhead transformer product information call 1-877-277-4636 or visit: www.cooperpower.com.

Krebs and Lansing <email@krebsandlansing.com>

Single Phase Pole Audible Sound Rating

1 message

DustinRScaife@eaton.com <DustinRScaife@eaton.com> Fri, Jul 25, 2014 at 1:21 PM
To: gregdixson@krebsandlansing.com

Greg –

This email is to confirm our phone conversation about the 167 kVA single phase pole type transformer. The sound level will be limited to 55 decibels based on the NEMA TR1 sound levels. Let me know if you have any questions.

Thanks,

Dustin Scaife
Product Application Engineer

Power Delivery Division

Eaton's Cooper Power Systems Business
1900 E. North St.

Waukesha, WI 53188

Office: (262) 524-4336

Mobile: (262) 422-9256
Fax: (770) 268-7510

DustinRScaife@eaton.com

www.CooperPower.com

www.eaton.com

/ Perfect Welding / Solar Energy / Perfect Charging

FRONIUS SYMO

SHIFTING THE LIMITS

/ The future of commercial solar is here - Introducing the new Fronius Symo.

/ Featuring nine models ranging from 10 kW to 24 kW, the transformerless Fronius Symo is the ideal compact three-phase inverter for all commercial applications. The high system voltage and wide input voltage range ensure maximum flexibility in system design. With its low roof loading, NEMA 4X, and 1000 V DC rating, the Fronius Symo can be mounted in many different ways, including flat on a roof or pole mount. The modern design is equipped with the SnapINverter mounting system, allowing for lightweight, secure and convenient installation and repair. Several industry-leading features are available with the Fronius Symo including Wi-Fi®* and SunSpec Modbus interfaces for seamless monitoring and datalogging, field proven Arc Fault Circuit Interruption (AFCI), NEC 2014 compliant, and Fronius' superb online and mobile monitoring platform Fronius Solar.web. The Fronius Symo: powering commercial projects that last.

TECHNICAL DATA FRONIUS SYMO

GENERAL DATA	STANDARD WITH ALL SYMO MODELS
Dimensions (width x height x depth)	20.1 x 28.5 x 8.9 inches
Degree of protection	NEMA 4X
Night time consumption	< 1 W
Inverter topology	Transformerless
Cooling	Variable speed fan
Installation	Indoor and outdoor installation
Ambient operating temperature range	-40°F - + 140 °F (-40 - +60 °C)
Permitted humidity	0 - 100 % (non-condensing)
DC connection terminals	6x DC+ and 6x DC- screw terminals for copper (solid / stranded / fine stranded) or aluminum (solid / stranded)
AC connection terminals	Screw terminals 14-6 AWG
Certificates and compliance with standards	UL 1741-2010, UL1998 (for functions: AFCI and isolation monitoring), IEEE 1547-2003, IEEE 1547.1-2008, ANSI/IEEE C62.41, FCC Part 15 A & B, NEC Article 690, C22. 2 No. 107.1-01 (September 2001), UL1699B Issue 2 -2013, CSA TIL M-07 Issue 1 -2013

GENERAL DATA	10.0-3 208/240	12.0-3 208/240	10.0-3 480	12.5-3 480	15.0-3 480	17.5-3 480	20.0-3 480	22.7-3 480	24.0-3 480
Weight	91.9 lbs.	91.9 lbs.	76.7 lbs.	76.7 lbs.	95.7 lbs.	95.7 lbs.	95.7 lbs.	95.7 lbs.	95.7 lbs.

PROTECTIVE DEVICES	STANDARD WITH ALL FRONIUS SYMO MODELS
AFCI & 2014 NEC Compliant	Yes
DC disconnect	Yes
DC reverse polarity protection	Yes
Ground Fault Protection with Isolation Monitor Interrupter	Yes

TECHNICAL DATA FRONIUS SYMO

INPUT DATA		10.0-3 208/240	12.0-3 208/240	10.0-3 480	12.5-3 480	15.0-3 480	17.5-3 480	20.0-3 480	22.7-3 480	24.0-3 480
Recommended PV power (kWp)		8.0 - 13.0	9.5 - 15.5	8.0 - 13.0	10.0 - 16.0	12.0 - 19.5	14.0 - 23.0	16.0 - 26.0	18.0 - 29.5	19.0 - 31.0
Max. usable input current (MPPT1/MPPT 2)		25.0 A / 16.5 A				33.0 A / 25.0 A				
Max. usable input current total (MPPT 1 + MPPT 2)		41.5 A				51 A				
Max. array short circuit current (1.5 * Imax) MPPT 1/MPPT 2)		37.5 A / 24.8 A				49.5 A / 37.5 A				
Integrated DC string fuse holders		-	-	-	-	-	-	6- and 6+		
MPP-voltage range		300 - 500 V	300 - 500 V	300 - 800 V	350 - 800 V	350 - 800 V	400 - 800 V	450 - 800 V	500 - 800 V	500 - 800 V
Operating voltage range		200 - 600 V	200 - 600 V	200 - 1000 V	200 - 1000 V					
Max. input voltage		600 V	600 V	1000 V	1000 V					
Nominal input voltage	208	350 V	350 V	NA	NA	NA	NA	NA	NA	NA
	240	370 V	370 V	NA	NA	NA	NA	NA	NA	NA
	480	NA	NA	675 V	685 V	685 V	695 V	710 V	720 V	720 V
Admissable conductor size DC		AWG 14 ... AWG 6 copper direct, AWG 6 aluminum direct, AWG 4 ... AWG 2 copper or aluminum with input combiner								
Number of MPPT		2								

OUTPUT DATA		10.0-3 208/240	12.0-3 208/240	10.0-3 480	12.5-3 480	15.0-3 480	17.5-3 480	20.0-3 480	22.7-3 480	24.0-3 480
Max. output power	208	9995 VA	11995 VA	NA	NA	NA	NA	NA	NA	NA
	240	9995 VA	11995 VA	NA	NA	NA	NA	NA	NA	NA
	480	NA	NA	9995 VA	12495 VA	14995 VA	17495 VA	19995 VA	22727 VA	23995 VA
Max. continuous output current	208	27.7 A	33.3 A	NA	NA	NA	NA	NA	NA	NA
	240	24.0 A	28.9 A	NA	NA	NA	NA	NA	NA	NA
	480	NA	NA	12.0 A	15.0 A	18.0 A	21.0 A	24.0 A	27.3 A	28.9 A
AC breaker size	208	35 A	45 A	NA	NA	NA	NA	NA	NA	NA
	240	30 A	40 A	NA	NA	NA	NA	NA	NA	NA
	480	NA	NA	15 A	20 A	25 A	30 A	30 A	35 A	40 A
Max. Efficiency		97.0 %	97.0 %	98.1 %	98.1 %	98.0 %				
CEC Efficiency	208	96.5 %	96.5 %	NA	NA	NA	NA	NA	NA	NA
	240	96.5 %	96.5 %	NA	NA	NA	NA	NA	NA	NA
	480	NA	NA	96.5 %	97.0 %	97.0 %	97.5 %	97.5 %	97.5 %	97.5 %
Admissable conductor size AC		AWG 14 - AWG 6								
Grid connection ($U_{ac,r}$)		208/240	208/240	480 Delta +N**	480 Delta + N**	480 Delta + N**				
Frequency (f_r)		60 Hz								
Total harmonic distortion		< 1.75 %								
Power factor		0 - 1 ind./cap.								

INTERFACES	AVAILABLE WITH ALL FRONIUS SYMO MODELS
USB (A socket)	Datalogging and inverter update possible via USB
2x RS422 (RJ45 socket)	Fronius Solar Net, interface protocol
AVAILABLE WITH THE FRONIUS DATAMANAGER 2.0 CARD (ONLY ONE CARD REQUIRED FOR UP TO 100 UNITS)	
Wi-Fi/Ethernet/Serial/ Datalogger and webserver	Wireless standard 802.11 b/g/n / Fronius Solar.web, SunSpec Modbus TCP, JSON / SunSpec Modbus RTU
6 inputs and 4 digital I/Os	Load management; signaling, multipurpose I/O

**+N for sensing purposes - no current carrying conductor.

Fronius USA LLC
6797 Fronius Drive
Portage, IN 46368
USA
pv-support-usa@fronius.com
www.fronius-usa.com

Rev. 6.3.15 USA

/ Perfect Welding / Solar Energy / Perfect Charging

WE HAVE THREE DIVISIONS AND ONE PASSION: SHIFTING THE LIMITS OF POSSIBILITY.

/ Whether welding technology, photovoltaics or battery charging technology – our goal is clearly defined: to be the innovation leader. With around 3,000 employees worldwide, we shift the limits of what's possible - our record of over 1,000 granted patents is testimony to this. While others progress step by step, we innovate in leaps and bounds. Just as we've always done. The responsible use of our resources forms the basis of our corporate policy.

Further information about all Fronius products and our global sales partners and representatives can be found at **www.fronius.com**

FRONIUS INTERNATIONAL GMBH
Günter Fronius Straße 1, A-4600 Wels - Thalheim

Angaben zu Geräuschemissionswerten gemäß Lärm und Vibrations- Arbeitsschutzverordnung

Noise emissions data in accordance with the directive on protection of workers against noise and vibration

Données relatives aux valeurs des émissions sonores et des vibrations - Ordonnance sur la sécurité et l'hygiène du travail

---

Wels-Thalheim, 2014-01-27

Fronius Symo 20.0-3-M

Der Solar-Wechselrichter erzeugt einen maximalen Schallleistungspegel von

The photovoltaic inverter generates a maximum sound power level of

L'onduleur solaire émet un niveau de puissance acoustique de

65 dB(A) (ref. 1pW)

bei Volllastbetrieb gemäß IEC 62109-1.

when operating under full load in accordance with IEC 62109-1.

fonctionnement à pleine charge, conformément à la norme IEC 62109-1.

Gemessen wird nach EN ISO 9614-2:1996

The measurement is carried out in accordance with EN ISO 9614-2:1996

Mesure effectuée selon la norme EN ISO 9614-2 :1996

Die Kühlung des Gerätes erfolgt durch eine elektronische Temperaturregelung so geräuscharm wie möglich und ist abhängig von der umgesetzten Leistung, der Umgebungstemperatur, der Verschmutzung des Gerätes u.a.m.

The device is cooled as quietly as possible with the aid of an electronic temperature control system, and depends on the amount of converted power, the ambient temperature, the level of soiling of the device is, etc.

Grâce à une régulation électronique de la température, le bruit du refroidissement de l'appareil est maintenu aussi faible que possible et dépend de la puissance transformée, de la température ambiante, du niveau de propreté de l'appareil, etc.

Ein arbeitsplatzbezogener Emissionswert kann für dieses Gerät nicht angegeben werden, da der tatsächlich auftretende Schalldruckpegel stark von der Montagesituation, der Netzqualität, den umgebenden Wänden und den allgemeinen Raumeigenschaften abhängig ist.

It is not possible to provide a workplace-related emission value for this device because the actual sound pressure level is heavily influenced by the installation situation, the power quality, the surrounding walls and the properties of the room in general.

Une valeur d'émission rapportée au poste de travail ne peut être indiquée pour cet appareil car le niveau de pression acoustique est fortement dépendant de la situation de montage, de la qualité du réseau, des cloisons environnantes et des caractéristiques générales du local.

STATE OF VERMONT
PUBLIC SERVICE BOARD

Application of Orchard Road Solar I, LLC for a certificate of public good, pursuant to 30 V.S.A. §§ 219a and 248, to install and operate a 500 kW group net metered solar electric generation facility located on Orchard Road in Middletown Springs, Vermont, to be known as the "Orchard Road Solar Project"	)	CPG #NMP ____

PREFILED DIRECT TESTIMONY OF SETH D. GODDARD

July 15, 2016

Summary: Mr. Goddard's testimony addresses the potential effects of the Project on Waste Disposal [10 V.S.A. § 6086(a)(1)(B)], Soil Erosion [10 V.S.A. § 6086(a)(4)], and Aesthetic Impacts – Noise [30 V.S.A. § 248(b)(5)].

Q. Please state your name, occupation and business address.

Response: My name is Seth Goddard. I am Vice President at Krebs & Lansing Consulting Engineers, Inc. and a State of Vermont Professional Engineer #55582. My business address is 164 Main Street, Suite 201, Colchester, Vermont 05446.

Q. Please describe your educational background and work experience.

Response: After receiving my BS in Civil Engineering from the University of Vermont in 2005, I joined Krebs and Lansing Consulting Engineers, Inc. ("K&L") where I have worked as an engineer. In 2014, I became an owner of the firm. In my present position I continue to perform extensive work in civil engineering design, permitting and construction services for commercial, industrial, institutional and residential construction projects. I have performed civil site design and related work for utility projects and several other photovoltaic electric generation systems located in Vermont. My resume is attached as *Exhibit ORS-SDG-1*.

Q. Have you previously testified before the Public Service Board or in other judicial or administrative proceedings?

Response: Yes, I have provided testimony in Docket #8523 (Next Generation Solar Farm in New Haven) and Docket #8634 (Lamoille River Solar Project in Milton), among others.

Q. What is the purpose of your testimony?

Response: My testimony presents and summarizes my professional opinion regarding the design and potential impacts of the Orchard Road Solar Project (the "Project") under certain

criteria of 30 V.S.A. § 248, namely: noise (30 V.S.A § 248(b)(5)), waste disposal (10 V.S.A. § 6086(a)(1)(B)), and soil erosion (10 V.S.A. § 6086(a)(4)).

SECTION 248 CRITERIA

Waste Disposal - 10 V.S.A. § 6086(a)(1)(B)

Q. Please describe your consideration of waste disposal for the Project.

Response: The Act 250 waste disposal criterion incorporated into Section 248 review provides that a project must meet applicable health and environmental conservation department regulations regarding the disposal of waste, and must not involve the injection of waste materials into groundwater or wells.

The operation of the Project will not generate solid wastes, will not involve the injection of waste materials into groundwater or wells, and will not generate sanitary waste or stormwater runoff from new impervious surface that would require treatment pursuant to a Vermont Department of Environmental Conservation (DEC) permit. The three Project transformers will be located on a GMP utility pole on Wescott Road. The transformers will utilize non-petroleum oil which biodegrades in the environment in the event of an accidental spill.

The Project requires approximately 0.72 acres of vegetative clearing as shown on the site plan. ***Exhibit ORS-RV-2***. The majority of the vegetation is low lying shrubs with medium sized trees scattered throughout the shrubs. These areas are shown on the site plan. Where tree clearing will occur, all trees will be cut flush with the existing grade and stumps will remain in place outside of the fenced area. Cut trees and branches will be ground and used as mulch on site.

Q. What are the Project's plans in terms of stormwater management during construction and operation?

Response: The project will not be subject to an Agency of Natural Resources Construction Stormwater General Permit 9020 because less than one acre will be disturbed during construction. The total soil disturbance during construction of this Project will be approximately 0.62 acres. This disturbance will be for construction of new infrastructure such as the access drive, equipment pads, underground utility lines, Project perimeter fence, proposed power poles, construction staging, solar module racking supports and miscellaneous other disturbances in upland areas.

The proposed 12' wide permanent gravel access drive will be graded and improved with a gravel base from its existing intersection with Wescott Road to the Project site, which is a distance of approximately 175 feet. The finished grade of the new access road will match the existing grade. A cross-section of the access drive is provided in ***Exhibit ORS-RV-2.***

The existing topography is also shown on the attached Site Plan. ***Exhibit ORS-RV-2.*** No changes to the topography are proposed. All topsoil that is excavated for construction of the access road will be stockpiled or spread on site for the life of the Project, to be returned to the site upon Project decommissioning. Any short-term temporary stockpiles during construction will be protected from erosion by silt fence and returned to the areas from which they came when the temporary construction improvements are removed.

Stormwater runoff and erosion control methods that will be used during construction include temporary soil stabilization with mulch within 14 days of initial site disturbance, and permanent stabilization with topsoil, seed and mulch after final grading.

The Project will be constructed in accordance with the Vermont Standards & Specifications for Erosion Prevention and Sediment Control, 2006. These are established and proven measures, accepted by ANR, to prevent erosion from occurring and treating stormwater runoff effectively before it reaches receiving waters. Implementation of these measures will prevent erosion and protect water quality.

Construction of the Project will result in approximately 0.07 acres of new impervious surface after construction is complete. The new impervious surface is less than an acre; therefore, no operational phase stormwater management or permit is required.

Soil Erosion - 10 V.S.A. § 6086(a)(4)

Q. Will the Project cause unreasonable soil erosion or a reduction in the capacity of the land to hold water, so that a dangerous or unhealthy condition may result? Please explain why or why not.

Response: No, it will not. The Project does not trigger the need for a State of Vermont Construction General Permit as the total soil disturbance during construction of this Project will be approximately 0.62 acres, and appropriate erosion control measures will be implemented following the Vermont Low Risk Site Handbook for Erosion Prevention and Sediment Control, August 2006.

Further, the Project will have minimal impact on landform cover. The Project proposes only 0.07 acres of proposed new impervious surface on an approximately 5-acre site. The low amount of new impervious surface in conjunction with the proposed re-vegetation of the staging area disturbance will result in the Project having no adverse impact on the capacity of the land to retain water.

Aesthetic Impacts – Noise30 V.S.A. § 248(b)(5)

Q. Will the Project result in undue aesthetic impacts due to noise?

Response: No, the Project will not result in any undue aesthetic impacts due to noise. Operational noise will be produced by two sources: the inverters and transformers. The maximum sound levels generated by the equipment, based upon the manufacturers' specifications, are as follows: 65 dBA at a 1-meter distance for the 21 (20kW/24kW) inverters and 55 dBA at a 1-meter distance for the 167 kVA pole mounted transformers. Final inverter selection will be made after permitting and prior to construction, but this noise modeling reflects one of the loudest possible inverter selections that could be made.

The closest off-site residence is approximately 400 feet from the closest solar module. After combining all transformer and inverter operational noise, and accounting for the attenuation of sound over distance, it is estimated that this Project will produce a maximum noise level at the nearest residence of 32 dBA during daylight hours and 14 dBA during nighttime hours.

I have prepared a sound map and associated calculations, which is included as *Exhibit ORS-SDG-2*. It is my understanding that this level would be below the residential noise guidelines established by the U.S. Environmental Protection Agency, and it is my professional opinion that these noise levels do not rise to the level of undue aesthetic impact.

Q. Does this conclude your testimony?

Response: Yes, it does.

I, Seth Goddard, do hereby swear and affirm under the penalty of law that the information provided in my testimony is accurate to the best of my knowledge, and that I have personal knowledge of and am able to testify as to the validity of the information contained in my testimony and attached exhibits.

Seth Goddard

State of Vermont
County of CHITTENDEN

The foregoing instrument was signed and acknowledged before me this 13 day of JULY, 2016 at COLCHESTER, Vermont by SETH GODDARD who acknowledged the act to be his free act and deed.

KATELYN E. ESTERBY NOTARY PUBLIC STATE OF VERMONT

Notary Public

Name of Notary: KATELYN ESTERBY

Commission Expires: 2/10/2019

Exhibit ORS-SDG-1

KREBS & LANSING

Consulting Engineers, Inc.

SETH D. GODDARD

Vice President ✹ VT P.E. 55582

Mr. Goddard joined Krebs and Lansing in 2005 and became an owner in 2014. Mr. Goddard has worked on a variety of civil engineering designs, permitting, and construction services for many commercial, industrial, residential, and institutional civil site design projects. These projects include the design of roads, construction access roads, utility systems, storm control and treatment systems, onsite sanitary sewer systems, municipal sanitary sewer, domestic water supply, municipal water supply systems, mass earthworks, grading, and erosion control measures.

Mr. Goddard is well established and provides professional knowledge in civil engineering site and stormwater design, utility, and surveying. He has provided support for numerous projects under Section 248 review by the State of Vermont Public Service Board. ***Mr. Goddard has 10 years of professional experience.***

ERWR Whitcomb Solar Farm, LLC - *2.2 MW Solar Array*

- Civil site design for 2.2 MW solar array on a 15 acre site including stormwater design and Section 248 permit support.

CRL Solar, LLC - *2.2 MW Solar Array*

- Civil site design for 2.2 MW solar array on a 10 acre site including wetland permitting, Individual Construction Stormwater Discharge Permit and Section 248 permit support.

Westman GLC Solar, LLC - *500 kW Solar Array*

- Civil site design for 500 kW solar array and Section 248 Permit support.

Westman GLC Solar, LLC - *500 kW Solar Array*

- Civil site design for 500 kW solar array and Section 248 Permit support.

Kingdom Community Wind - *21 Wind Turbine Generators*
4 mile crane path, 2 mile access road and associated stormwater system

- Design of the crane paths, access road, substation and operations & maintenance building civil site improvements, coordination with electrical collector and transmission system designs, design of stormwater collection and treatment system including the State of Vermont high elevation renewable energy project credits, construction stormwater and Section 248 permit support.

Vermont Gas Systems, Inc. - various projects
Phase VI System Expansion, 4.1 mile 16" natural gas pipeline St. Albans and Georgia, Vermont.

Phase VII System Expansion, 3.8 mile 16" natural gas pipeline Georgia, Vermont. Currently in planning process.

EDUCATION Bachelor of Science in Civil Engineering
University of Vermont, Burlington, VT, 2005

PROFESSIONAL LICENSE & CERTIFICATION
Vermont Professional Engineer, No. 55582

seth.goddard@krebsandlansing.com ▪ 802-878-0375 ▪ Fax 802-878-9618
164 Main Street, Suite 201 ▪ Colchester, VT 05446

Exhibit ORS-SDG-2

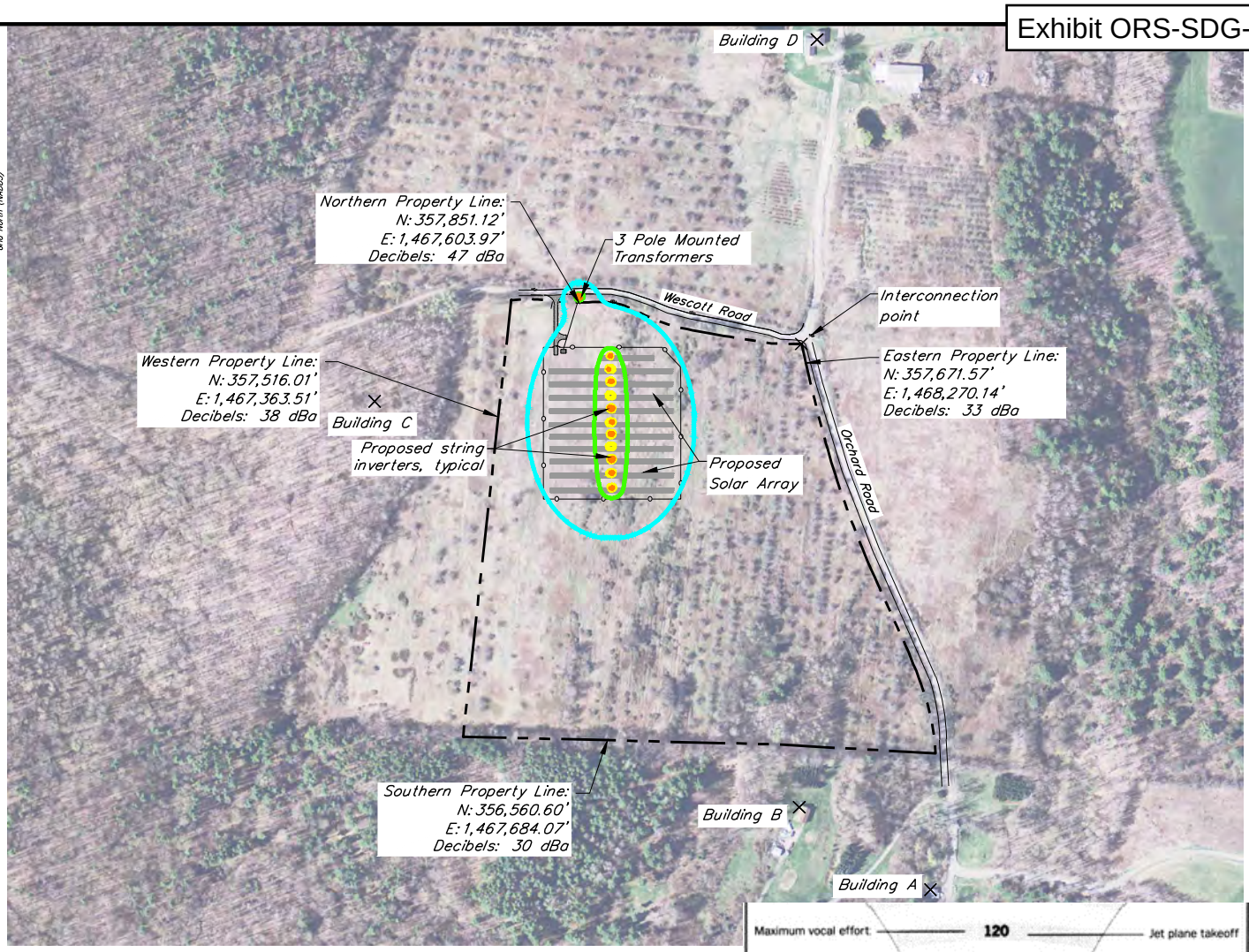

Notes:

1. Sound from inverters was measured in an ambient noise test on the Fronius Symo 20kW/24kW Inverters. Fronius specifies that the inverter creates 65 dBa in accordance with IEC 62109-1 which measures sound at a distance of 1 meter from the unit. Calculated sound level at 3 meters is 55.5 dBa. Sound levels for pole mounted transformers are a maximum of 55 dBa [measured at 0.3 meter, as per NEMA TR1 (ANSI/IEEE Std. C57.12-90-1993, sec. 13.3.4)]. Assuming 1 meter to be conservative calculated sound level at 3 meters is 45.5 dBa.

2. Other decibel ranges were derived using the following distance damping equation [L2 = L1 -20 Log(d1/d2)]. This damping equation was the only factor considered in decibel range attenuation estimates. Elevation, ambient noise, vegetation, proposed solar array and other structures which would further effect the attenuation of sound levels were not considered in this study. Sound levels depicted are for all (21) Fronius Symo 20kW/24kW inverters and (3) Cooper pole mounted transformers operating simultaneously at maximum noise level. See additional calculation information on Sound 2, Sound 3 & Sound 4.

3. Plans Sound 3 & Sound 4, run the calculations for nighttime operation. Site inverters make negligible noise when not loaded with power. For this calculation we assume the inverters will make no noise. The site transformers will still make some noise at night, to be conservative the nighttime calculation models the transformers running at maximum noise simultaneously.

4. Sound levels reported do not account for any background noise. Local background noise may exceed sound created by project equipment.

Legend:

- 70 dBa range
- 60 dBa range
- 50 dBa range
- 40 dBa range

0' 250' 500' 1,000'

GRAPHIC SCALE 1" = 500'

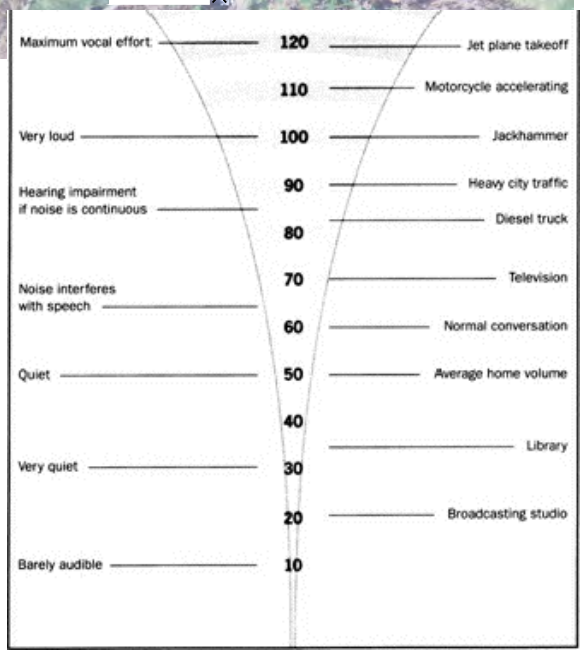

Decibel Breakdown Compared to Everyday Noises

Krebs & Lansing Consulting Engineers, Inc.
164 Main Street, Suite 201
Colchester, VT 05446
T: (802) 878-0375
F: (802) 878-9618
email@krebsandlansing.com

groSolar
205 Billings Farm Road, Building 4
White River Junction, VT 05001
www.grosolar.com

FULL DAYTIME OPERATION SOUND LEVEL PLAN

Basic Sound Level Estimates for Noise Produced by Transformers and Inverters

Project: ORCHARD ROAD SOLAR

Location: 30 Orchard Road, Middletown Springs, VT

Source Data:
Chart found at
www.soundinstitute.com/article_detail.cfm/ID/95

Plan ID: Sound 1

Scale: 1" = 500'

Date: 06/29/16

DRAWN BY: SDG

CHECKED BY: GTD

Revision Date:

Middletown Springs Project, 30 Orchard Road, Middletown Springs, Vermont - DAYTIME

Sound Source #	Easting (feet)	Northing (feet)	Noise Level (dBa @ 3 Meters)
Fronius Symo 20kW/24kWL (1-21)	See Plan	See Plan	55.5
167 kVA Pole Mounted Transformer (1)	1,467,602.59	357,865.33	45.5
167 kVA Pole Mounted Transformer (2)	1,467,598.79	357,869.22	45.5
167 kVA Pole Mounted Transformer (3)	1,467,606.39	357,869.22	45.5

Fronius Symo 20kW/24kW Inverter: Fronius specifies that the inverter creates 65 dBa in accordance with IEC 62109-1 which measures sound at a distance of 1 meter from the unit. Calculated sound level at 3 meters is 55.5 dBa.

Single-Phase Overhead Transformers 167kVA Cooper Power Systems specifies the units peak noise level as <45.5 dBa measured at 3 meters (Manufacturer specification is a maximum of 55 dBa measured at 0.3 meter, as per NEMA TR1 (ANSI/IEEE Std. C57.12-90-1993, sec. 13.3.4). Assuming 1 meter to be conservative the calculated sound level at 3 meters is 45.5 dBa.

Formulas used for Calculations

Adding of Noise Levels

$L_T = 10 \times \text{Log}_{10} (10^{L1/10} + 10^{L1/10} + ... + 10^{Ln/10})$

Where:

L_T = Total noise level of all equipment

Ln = Noise level for each piece of equipment

Noise Level Changes with Distance

Lb = La - 20 x Log10 (Db/Da)

Where:

Lb = Noise level at new distance

La = Noise level at original distance

Db = New distance from source of noise

Da = Original distance from source of noise

	1 meter	3 meter
Fronius Symo 20kW/24kW	65.000	55.458
167 kVA Pole Mounted Transformer	55.000	45.458

Points of Interest were chosen based on close proximity to the proposed project.

Points of Interest	Easting (feet)	Northing (feet)	Estimated Noise Level Based on Project Components (Sound Pressure, dBa)
Northern Property Line	1,467,603.97	357,851.12	47
Eastern Property Line	1,468,270.14	357,671.57	33
Southern Property Line	1,467,684.07	356,560.60	30
Western Property Line	1,467,363.51	357,516.01	38
Building A	1,468,637.85	356,119.83	24
Building B	1,468,250.61	356,362.75	27
Building C *Nearest Residence*	1,466,998.26	357,559.82	32
Building D	1,468,303.11	358,626.06	27

Krebs & Lansing Consulting Engineers, Inc.
164 Main Street, Suite 201
Colchester, VT 05446
T: (802) 878-0375
F: (802) 878-9618
email@krebsandlansing.com

groSolar
205 Billings Farm Road, Building 4
White River Junction, VT 05001
www.grosolar.com

FULL DAYTIME OPERATION SOUND LEVEL PLAN

Basic Sound Level Estimates for Noise Produced by Transformers and Inverters

Project: ORCHARD ROAD SOLAR

Location: 30 Orchard Road, Middletown Springs, VT

Source Data: *Chart found at www.soundinstitute.com/article_detail.cfm/ID/95*

Plan ID: Sound 2

Scale: N/A

Date: 06/29/16

DRAWN BY: SDG

CHECKED BY: GTD

Revision Date:

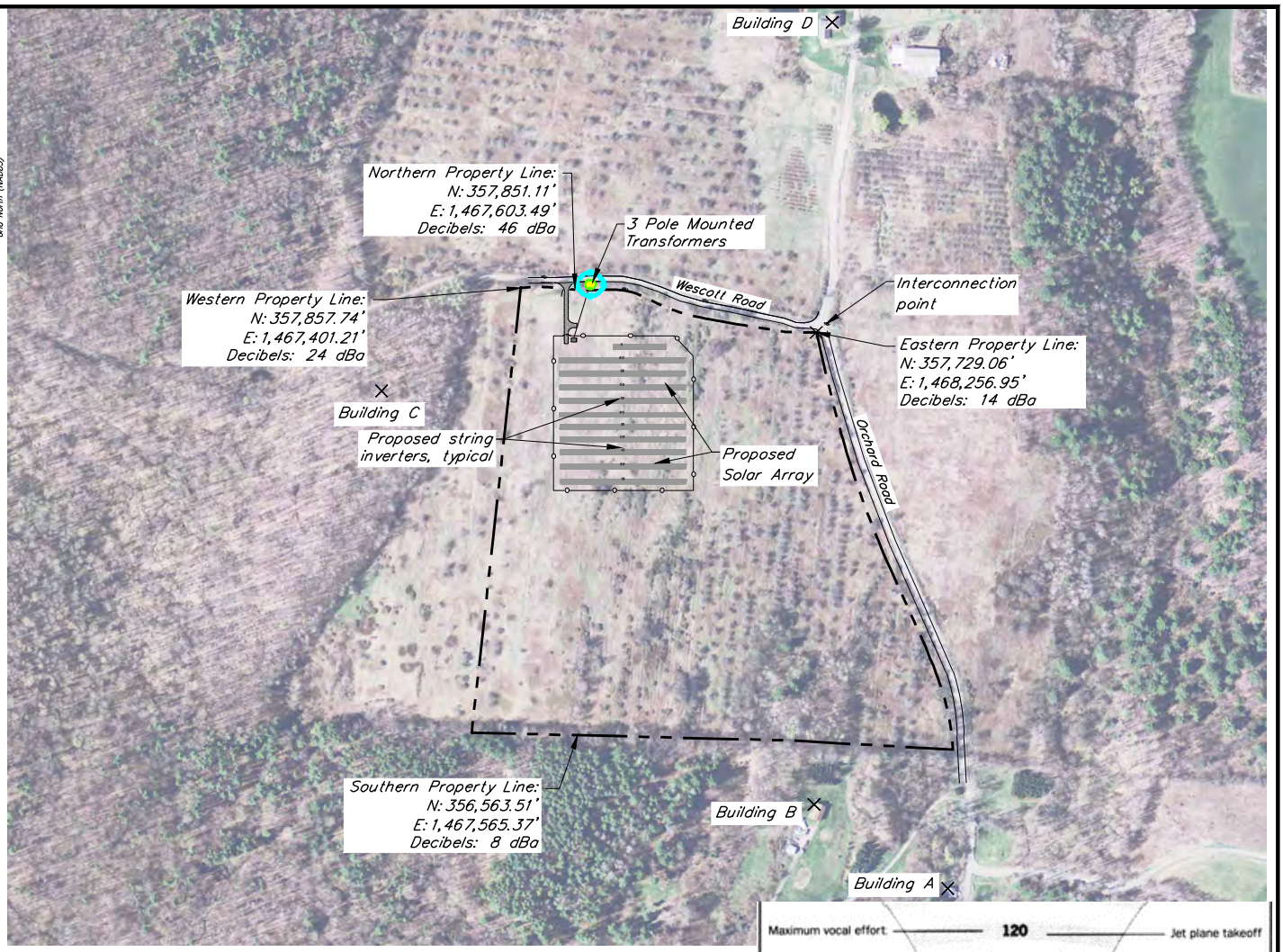

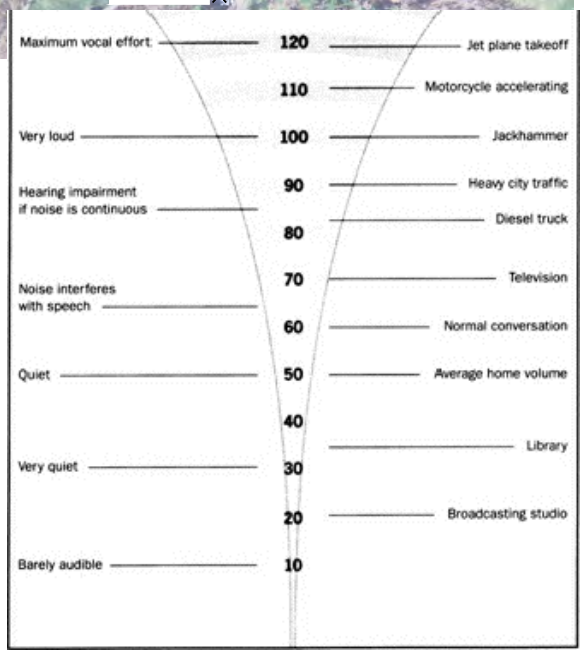

Decibel Breakdown Compared to Everyday Noises

Notes:

1. Sound levels for pole mounted transformers are a maximum of 55 dBa [measured at 0.3 meter, as per NEMA TR1 (ANSI/IEEE Std. C57.12-90-1993, sec. 13.3.4)]. Assuming 1 meter to be conservative calculated sound level at 3 meters is 45.5 dBa.

2. Other decibel ranges were derived using the following distance damping equation [L2 = L1 -20 Log(d1/d2)]. This damping equation was the only factor considered in decibel range attenuation estimates. Elevation, ambient noise, vegetation, proposed solar array and other structures which would further effect the attenuation of sound levels were not considered in this study. Sound levels depicted are for the (3) Cooper Pole Mounted 167kVA Transformers operating simultaneously at maximum noise level.

3. Sound levels reported do not account for any background noise. Local background noise may exceed sound created by project equipment.

Legend:

- 70 dBa range
- 60 dBa range
- 50 dBa range
- 40 dBa range

0' 250' 500' 1,000'

GRAPHIC SCALE 1" = 500'

Krebs & Lansing Consulting Engineers, Inc.
164 Main Street, Suite 201
Colchester, VT 05446
T: (802) 878-0375
F: (802) 878-9618
email@krebsandlansing.com

groSolar
205 Billings Farm Road, Building 4
White River Junction, VT 05001
www.grosolar.com

NIGHTTIME OPERATION SOUND LEVEL PLAN

Basic Sound Level Estimates for Noise Produced by Transformers

Project: ORCHARD ROAD SOLAR

Location: 30 Orchard Road, Middletown Springs, VT

Source Data:
Chart found at
www.soundinstitute.com/article_detail.cfm/ID/95

Plan ID: Sound 3

Scale: 1" = 500'

Date: 06/29/16

DRAWN BY: SDG

CHECKED BY: GTD

Revision Date:

Middletown Springs Project, 30 Orchard Road, Middletown Springs, Vermont - NIGHTTIM

Sound Source #	Easting (feet)	Northing (feet)	Noise Level (dBa @ 3 Meters)
167 kVA Pole Mounted Transformer (1)	1,467,602.59	357,865.33	45.5
167 kVA Pole Mounted Transformer (2)	1,467,598.79	357,869.22	45.5
167 kVA Pole Mounted Transformer (3)	1,467,606.39	357,869.22	45.5

Single–Phase Overhead Transformers 167kVA Cooper Power Systems specifies the units peak noise level as <45.5 dBa measured at 3 meters (Manufacturer specification is a maximum of 55 dBa measured at 0.3 meter, as per NEMA TR1 (ANSI/IEEE Std. C57.12–90–1993, sec. 13.3.4). Assuming 1 meter to be conservative the calculated sound level at 3 meters is 45.5 dBa.

Formulas used for Calculations

Adding of Noise Levels

$L_T = 10 \times \text{Log}_{10} (10^{L1/10} + 10^{L1/10} + ... + 10^{Ln/10})$

Where:

L_T = Total noise level of all equipment

Ln = Noise level for each piece of equipment

Noise Level Changes with Distance

Lb = La - 20 x Log10 (Db/Da)

Where:

Lb = Noise level at new distance

La = Noise level at original distance

Db = New distance from source of noise

Da = Original distance from source of noise

	1 meter	3 meter
167 kVA Pole Mounted Transformer	55.000	45.458

Points of Interest were chosen based on close proximity to the proposed project.

Points of Interest	Easting (feet)	Northing (feet)	Estimated Noise Level Based on Project Components (Sound Pressure, dBa)
Northern Property Line	1,467,603.49	357,851.11	46
Eastern Property Line	1,468,256.95	357,729.06	14
Southern Property Line	1,467,565.37	356,563.51	8
Western Property Line	1,467,401.21	357,857.74	24
Building A	1,468,637.85	356,119.83	4
Building B	1,468,250.61	356,362.75	6
Building C *Nearest Residence*	1,466,998.26	357,559.82	14
Building D	1,468,303.11	358,626.06	10

Krebs & Lansing Consulting Engineers, Inc.
164 Main Street, Suite 201
Colchester, VT 05446
T: (802) 878-0375
F: (802) 878-9618
email@krebsandlansing.com

groSolar
205 Billings Farm Road, Building 4
White River Junction, VT 05001
www.grosolar.com

NIGHTTIME OPERATION SOUND LEVEL PLAN

Basic Sound Level Estimates for Noise Produced by Transformers

Project: ORCHARD ROAD SOLAR

Location: 30 Orchard Road, Middletown Springs, VT

Source Data: *Chart found at www.soundinstitute.com/article_detail.cfm/ID/95*

Plan ID: Sound 4

Scale: N/A

Date: 06/29/16

DRAWN BY: SDG

CHECKED BY: GTD

Revision Date:

Effective March 2014
Supersedes August 2013

Single-phase overhead transformers

General

Eaton's Cooper Power Systems manufactures a complete line of single-phase overhead-type distribution transformers. Single-phase transformers are available as conventional (5-167kVA), completely self-protected (CSP 5-75kVA), or MagneX™ interrupter-protected (5-167kVA) in a variety of ratings to meet or exceed the requirements of applicable ANSI® and NEMA® standards. Units designed per Rural Utilities Service (RUS) standards are also available.

CSP transformers have direct connected primary arresters, secondary circuit breakers, and internal primary voltage fuses. This eliminates the need for separately mounted protective devices and provides reduced installation costs.

The MagneX interrupter is an overcurrent protective device that protects distribution transformers from damaging overloads and secondary faults, and is also used for switching the transformer "on" or "off."

Transformers shown include, first and second, single-phase overhead conventional transformers, and third, MagneX interrupter-protected transformer.

Cooper Power Systems
by EATON

Standard features

- Meet or exceeds ANSI® and NEMA® standards
- Meets DOE Energy Efficiency Standard 10 CFR Part 431 for distribution transformers
- EPRI recommended interlaced core-type design (5-75 kVA)
- Tank coating exceeds IEEE Std C57.12.31™-2010 standard
- Cover with a minimum dielectric strength of 8 kV
- Tin-plated high and low-voltage bushing terminals to accommodate aluminum or copper conductors
- Laser-engraved nameplate
- Wet process porcelain high-voltage bushings resistant to high-voltage corona
- Tank grounding provisions
- Envirotemp™ FR3™ fluid or electrical grade mineral oil
- Heavy-duty lifting lugs and hanger brackets per ANSI® requirements1
- Visible cover ground on units with cover-mounted bushings
- Recessed tank bottom that offers protection when sliding over rough surfaces
- Automatic pressure relief device
- Polymer low-voltage bushings (5-75 kVA)
- Arrester mounting and grounding provisions
- Internal mark indicating the proper oil level
- Permanently stamped secondary leads to ensure proper identification
- Corrosion-resistant cover band
- Quality System ISO 9001 certified

Optional accessories

- Taps either two 2.5 % above and below; four 2.5% below; NEMA® taps or special taps
- Externally-operable tap changer switches for safe operation
- Multiple voltage primaries (5-75kVA)
- Externally-operable multiple voltage switches for safe operation
- High corrosion area protection with 304 or 409 stainless steel hardware and tanks
- MagneX™ interrupter
- Birdguards
- Envirotemp™ FR3™ fluid where less-flammable fluid is required and superior environmental characteristics are desired
- Cover with a minimum dielectric strength of 15 kV
- Extra creep high voltage bushings (up to 150 kV BIL)
- Porcelain low-voltage bushings
- Canadian Standards Association (CSA) conforming design
- Special designs conforming to international specifications
- Drain/sampling valve
- Pressure vacuum gauge (tank size limitations apply)
- Filter press connections
- Temperature gauge (tank size limitations apply)
- Liquid level gauge (tank size limitations apply)
- High efficiency transformers at 0.05% or higher above DOE efficiency

[1]Lugs and brackets per ANSI requirements up to 4500 lbs.

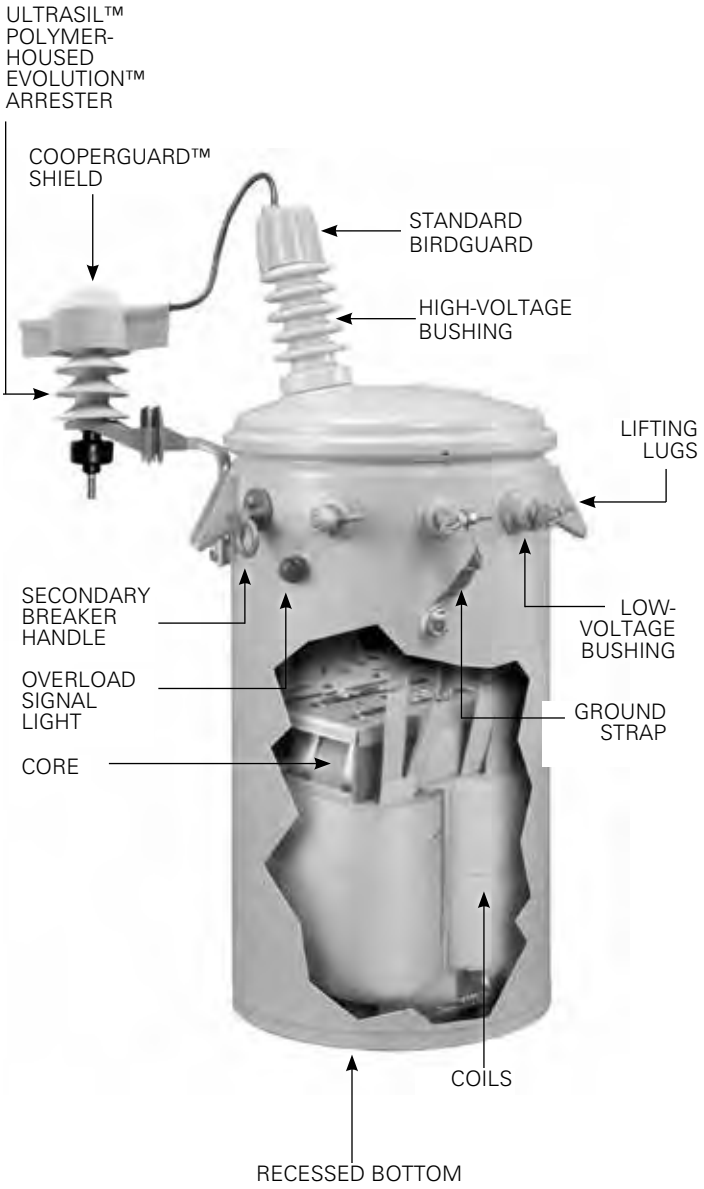

Figure 1. Single-phase overhead CSP transformer.

Single-phase overhead conventional

Product Scope:
kVA: 5-167
Primary Voltage: 2400-19,920 V
Secondary Voltage: 120-600 V

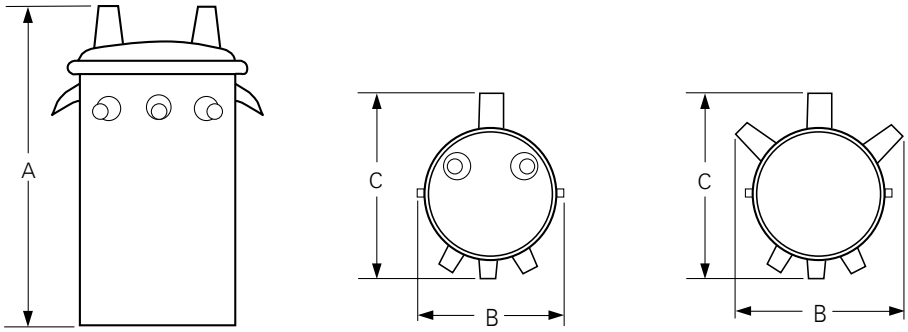

≥95 kV BIL ≤75 kV BIL[1]

Table 1. Typical dimensions and Weights[2,3]

	Dimensions (in.)							
	"A"				"B"			
kVA	≤75 kV BIL	95 kV BIL	125 kV BIL	150 kV BIL	≤75 kV BIL	≥95 kV BIL	"C"[1]	Approx. Weight (lbs.)
5	26	32	42	45	28[1]	17	20	220
10	26	32	42	45	28[1]	17	20	220
15	30	35	46	49	28[1]	17	20	280
25	31	38	48	51	30[1]	20	22	350
37.5	33	40	52	55	31[1]	20	24	450
50	36	44	52	55	33[1]	22	25	600
75	39	51	54	57	33[1]	24	28	820
100	40	55	58	61	33[1]	27	31	1100
167	47	55	58	61	35[1]	35	37	1400

[1] Includes sidewall mount H.V. bushings.
[2] Includes radiators.
[3] Weights, gallons of fluid and dimensions are for reference only, and not for construction. Please contact Eaton's Cooper Power Systems for exact dimensions.

Single-phase overhead completely self protected (CSP)

Product Scope:
kVA: 5-75
Primary Voltage: 2400-19,920 V
Secondary Voltage: 120-600V

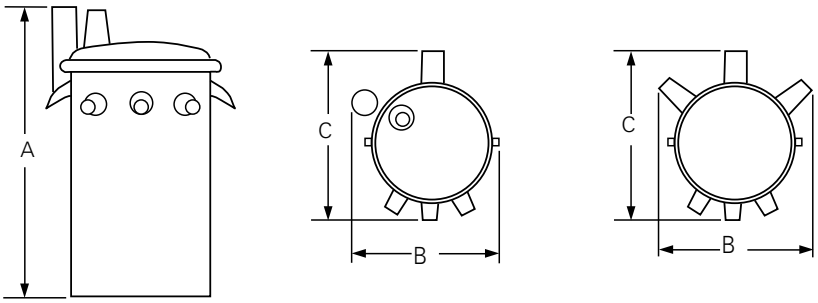

≥95 kV BIL ≤75 kV BIL[1]

Table 2. Typical Dimensions and Weights[2,3]

	Dimensions (in.)							
	"A"				"B"			
kVA	≤75 kV BIL	95 kV BIL	125 kV BIL	150 kV BIL	≤75 kV BIL	≥95 kV BIL	"C"1	Approx Weight (lbs.)
5	26	36	42	45	28[1]	17	20	240
10	26	36	42	45	28[1]	17	20	240
15	30	42	46	49	28[1]	17	20	300
25	31	44	48	51	30[1]	20	22	400
37.5	33	46	52	55	31[1]	20	25	500
50	36	46	52	55	33[1]	22	26	600
75	39	51	54	57	33[1]	24	30	900
100[4]	40	55	58	61	33[1]	27	34	1100
167[4]	47	55	58	61	35[1]	35	40	1600

[1] Includes sidewall mount H.V. bushings.
[2] Includes Radiators
[3] Weights, gallons of fluid and dimensions are for reference only, and not for construction. Please contact Eaton's Cooper Power Systems for exact dimensions.
[4] MagneX interrupter Only

Protection options

- High fire point Envirotemp™ FR3™ fluid for increased fire safety
- Secondary breaker with weak link for secondary fault and overload protection (5-75 kVA)
- Primary weak link fuse
- Current-limiting fuse for high interrupting ratings and limiting fault currents
- Low-voltage distribution class MOV arrester – internally or externally mounted
- MagneX interrupter (Primary Breaker) with isolation link
- MagneX interrupter (Primary Breaker) with partial range current-limiting fuse
- Lightning arresters for primary over-voltage protection: direct connected, normal or heavy duty metal oxide varistor (MOV) either internal (VariSTAR™), or external UltraSIL Polymer-Housed Evolution or UltraSIL™ Polymer-Housed VariSTAR arrester with polymer housing.

Quality control

Single-phase overhead-type transformers manufactured by Cooper Power Systems provide outstanding performance. All transformers from Cooper Power Systems pass tests as prescribed by ANSI® prior to shipment. Cores and coils are designed for high reliability and low field failure rates. The domed cover design in conjunction with the formed cover band provides increased pressure withstand capability, eliminates bushing overhang and improves cover retention. The high-voltage bushing design improves gasket protection and seal. The low-voltage polymer bushing virtually eliminates ultraviolet deterioration with its captured gasket, compression-limiting design. Transformers are designed and manufactured to be corrosion-resistant. Special attention is given to all welded external parts, to avoid moisture entrapment that can lead to corrosion problems. The recessed bottom design, as well as the stainless steel cover band ends, provide corrosion protection in areas that are more susceptible to coating damage during handling. All coating systems exceed IEEE Std C57.12.31™-2010 standard.

The Quality System at Eaton's Cooper Power Systems Transformer Products is ISO 9001 certified.

Fluid options

Transformers can be filled with standard electrical grade mineral insulating oil, Envirotemp™ FR3™ fluid, or other dielectric coolants.

For fire-sensitive locations, Envirotemp™ FR3™ fluid, a fire resistant natural ester-based fluid is recommended. Envirotemp™ FR3™ fluid also offers the benefits of a soy oil-based dielectric coolant that is sustainable and has unique environmental and material properties in addition to increased fire safety over conventional mineral oil.

Check with Eaton's Cooper Power Systems for the availability of other dielectric coolants in single-phase, pad-mounted transformers.

Eaton
1000 Eaton Boulevard
Cleveland, OH 44122
United States
Eaton.com

Eaton's Cooper Power Systems Business
2300 Badger Drive
Waukesha, WI 53188
United States
Cooperpower.com

© 2014 Eaton
All Rights Reserved
Printed in USA
Publication No. 201-10

Eaton, Cooper Power Systems, MagneX, VariSTAR, UltraSIL, Evolution, and CooperGuard are trademarks of Eaton in the U.S. and other countries. You are not permitted to use these trademarks without the prior written consent of Eaton.
IEEE Std. C57.12.31™-2010 standard is a trademark of the Institute of Electrical and Electronics Engineers, Inc., (IEEE). This product is not endorsed or approved by the IEEE.
Envirotemp™ and FR3™ are licensed trademarks of Cargill, Incorporated.
NEMA® is a registered trademark of the National Electrical Manufacturers Association.
ANSI® is a registered trademark of the American National Standards Institute.

Powering Business Worldwide

For Eaton's Cooper Power Systems single-phase overhead transformer product information call 1-877-277-4636 or visit: www.cooperpower.com.

Krebs and Lansing <email@krebsandlansing.com>

Single Phase Pole Audible Sound Rating

1 message

DustinRScaife@eaton.com <DustinRScaife@eaton.com> Fri, Jul 25, 2014 at 1:21 PM
To: gregdixson@krebsandlansing.com

Greg –

This email is to confirm our phone conversation about the 167 kVA single phase pole type transformer. The sound level will be limited to 55 decibels based on the NEMA TR1 sound levels. Let me know if you have any questions.

Thanks,

Dustin Scaife
Product Application Engineer

Power Delivery Division

Eaton's Cooper Power Systems Business
1900 E. North St.

Waukesha, WI 53188

Office: (262) 524-4336

Mobile: (262) 422-9256
Fax: (770) 268-7510

DustinRScaife@eaton.com

www.CooperPower.com

www.eaton.com

/ Perfect Welding / Solar Energy / Perfect Charging

FRONIUS SYMO

SHIFTING THE LIMITS

/ The future of commercial solar is here - Introducing the new Fronius Symo.

/ Featuring nine models ranging from 10 kW to 24 kW, the transformerless Fronius Symo is the ideal compact three-phase inverter for all commercial applications. The high system voltage and wide input voltage range ensure maximum flexibility in system design. With its low roof loading, NEMA 4X, and 1000 V DC rating, the Fronius Symo can be mounted in many different ways, including flat on a roof or pole mount. The modern design is equipped with the SnapINverter mounting system, allowing for lightweight, secure and convenient installation and repair. Several industry-leading features are available with the Fronius Symo including Wi-Fi®* and SunSpec Modbus interfaces for seamless monitoring and datalogging, field proven Arc Fault Circuit Interruption (AFCI), NEC 2014 compliant, and Fronius' superb online and mobile monitoring platform Fronius Solar.web. The Fronius Symo: powering commercial projects that last.

TECHNICAL DATA FRONIUS SYMO

GENERAL DATA	STANDARD WITH ALL SYMO MODELS
Dimensions (width x height x depth)	20.1 x 28.5 x 8.9 inches
Degree of protection	NEMA 4X
Night time consumption	< 1 W
Inverter topology	Transformerless
Cooling	Variable speed fan
Installation	Indoor and outdoor installation
Ambient operating temperature range	-40°F - + 140 °F (-40 - +60 °C)
Permitted humidity	0 - 100 % (non-condensing)
DC connection terminals	6x DC+ and 6x DC- screw terminals for copper (solid / stranded / fine stranded) or aluminum (solid / stranded)
AC connection terminals	Screw terminals 14-6 AWG
Certificates and compliance with standards	UL 1741-2010, UL1998 (for functions: AFCI and isolation monitoring), IEEE 1547-2003, IEEE 1547.1-2008, ANSI/IEEE C62.41, FCC Part 15 A & B, NEC Article 690, C22. 2 No. 107.1-01 (September 2001), UL1699B Issue 2 -2013, CSA TIL M-07 Issue 1 -2013

GENERAL DATA	10.0-3 208/240	12.0-3 208/240	10.0-3 480	12.5-3 480	15.0-3 480	17.5-3 480	20.0-3 480	22.7-3 480	24.0-3 480
Weight	91.9 lbs.	91.9 lbs.	76.7 lbs.	76.7 lbs.	95.7 lbs.	95.7 lbs.	95.7 lbs.	95.7 lbs.	95.7 lbs.

PROTECTIVE DEVICES	STANDARD WITH ALL FRONIUS SYMO MODELS
AFCI & 2014 NEC Compliant	Yes
DC disconnect	Yes
DC reverse polarity protection	Yes
Ground Fault Protection with Isolation Monitor Interrupter	Yes

TECHNICAL DATA FRONIUS SYMO

INPUT DATA		10.0-3 208/240	12.0-3 208/240	10.0-3 480	12.5-3 480	15.0-3 480	17.5-3 480	20.0-3 480	22.7-3 480	24.0-3 480
Recommended PV power (kWp)		8.0 - 13.0	9.5 - 15.5	8.0 - 13.0	10.0 - 16.0	12.0 - 19.5	14.0 - 23.0	16.0 - 26.0	18.0 - 29.5	19.0 - 31.0
Max. usable input current (MPPT1/MPPT 2)		25.0 A / 16.5 A				33.0 A / 25.0 A				
Max. usable input current total (MPPT 1 + MPPT 2)		41.5 A				51 A				
Max. array short circuit current (1.5 * Imax) MPPT 1/MPPT 2)		37.5 A / 24.8 A				49.5 A / 37.5 A				
Integrated DC string fuse holders		-	-	-	-	-	-	6- and 6+		
MPP-voltage range		300 - 500 V	300 - 500 V	300 - 800 V	350 - 800 V	350 - 800 V	400 - 800 V	450 - 800 V	500 - 800 V	500 - 800 V
Operating voltage range		200 - 600 V	200 - 600 V	200 - 1000 V	200 - 1000 V					
Max. input voltage		600 V	600 V	1000 V	1000 V					
Nominal input voltage	208	350 V	350 V	NA	NA	NA	NA	NA	NA	NA
	240	370 V	370 V	NA	NA	NA	NA	NA	NA	NA
	480	NA	NA	675 V	685 V	685 V	695 V	710 V	720 V	720 V
Admissable conductor size DC		AWG 14 ... AWG 6 copper direct, AWG 6 aluminum direct, AWG 4 ... AWG 2 copper or aluminum with input combiner								
Number of MPPT		2								

OUTPUT DATA		10.0-3 208/240	12.0-3 208/240	10.0-3 480	12.5-3 480	15.0-3 480	17.5-3 480	20.0-3 480	22.7-3 480	24.0-3 480
Max. output power	208	9995 VA	11995 VA	NA	NA	NA	NA	NA	NA	NA
	240	9995 VA	11995 VA	NA	NA	NA	NA	NA	NA	NA
	480	NA	NA	9995 VA	12495 VA	14995 VA	17495 VA	19995 VA	22727 VA	23995 VA
Max. continuous output current	208	27.7 A	33.3 A	NA	NA	NA	NA	NA	NA	NA
	240	24.0 A	28.9 A	NA	NA	NA	NA	NA	NA	NA
	480	NA	NA	12.0 A	15.0 A	18.0 A	21.0 A	24.0 A	27.3 A	28.9 A
AC breaker size	208	35 A	45 A	NA	NA	NA	NA	NA	NA	NA
	240	30 A	40 A	NA	NA	NA	NA	NA	NA	NA
	480	NA	NA	15 A	20 A	25 A	30 A	30 A	35 A	40 A
Max. Efficiency		97.0 %	97.0 %	98.1 %	98.1 %	98.0 %				
CEC Efficiency	208	96.5 %	96.5 %	NA	NA	NA	NA	NA	NA	NA
	240	96.5 %	96.5 %	NA	NA	NA	NA	NA	NA	NA
	480	NA	NA	96.5 %	97.0 %	97.0 %	97.5 %	97.5 %	97.5 %	97.5 %
Admissable conductor size AC		AWG 14 - AWG 6								
Grid connection ($U_{ac,r}$)		208/240	208/240	480 Delta +N**	480 Delta + N**	480 Delta + N**				
Frequency (f_r)		60 Hz								
Total harmonic distortion		< 1.75 %								
Power factor		0 - 1 ind./cap.								

INTERFACES	AVAILABLE WITH ALL FRONIUS SYMO MODELS
USB (A socket)	Datalogging and inverter update possible via USB
2x RS422 (RJ45 socket)	Fronius Solar Net, interface protocol
AVAILABLE WITH THE FRONIUS DATAMANAGER 2.0 CARD (ONLY ONE CARD REQUIRED FOR UP TO 100 UNITS)	
Wi-Fi/Ethernet/Serial/ Datalogger and webserver	Wireless standard 802.11 b/g/n / Fronius Solar.web, SunSpec Modbus TCP, JSON / SunSpec Modbus RTU
6 inputs and 4 digital I/Os	Load management; signaling, multipurpose I/O

**+N for sensing purposes - no current carrying conductor.

Fronius USA LLC
6797 Fronius Drive
Portage, IN 46368
USA
pv-support-usa@fronius.com
www.fronius-usa.com

Rev. 6.3.15 USA

/ Perfect Welding / Solar Energy / Perfect Charging

WE HAVE THREE DIVISIONS AND ONE PASSION: SHIFTING THE LIMITS OF POSSIBILITY.

/ Whether welding technology, photovoltaics or battery charging technology – our goal is clearly defined: to be the innovation leader. With around 3,000 employees worldwide, we shift the limits of what's possible - our record of over 1,000 granted patents is testimony to this. While others progress step by step, we innovate in leaps and bounds. Just as we've always done. The responsible use of our resources forms the basis of our corporate policy.

Further information about all Fronius products and our global sales partners and representatives can be found at **www.fronius.com**

FRONIUS INTERNATIONAL GMBH
Günter Fronius Straße 1, A-4600 Wels - Thalheim

Angaben zu Geräuschemissionswerten gemäß Lärm und Vibrations- Arbeitsschutzverordnung

Noise emissions data in accordance with the directive on protection of workers against noise and vibration

Données relatives aux valeurs des émissions sonores et des vibrations - Ordonnance sur la sécurité et l'hygiène du travail

---

Wels-Thalheim, 2014-01-27

Fronius Symo 20.0-3-M

Der Solar-Wechselrichter erzeugt einen maximalen Schallleistungspegel von

The photovoltaic inverter generates a maximum sound power level of

L'onduleur solaire émet un niveau de puissance acoustique de

65 dB(A) (ref. 1pW)

bei Volllastbetrieb gemäß IEC 62109-1.

when operating under full load in accordance with IEC 62109-1.

fonctionnement à pleine charge, conformément à la norme IEC 62109-1.

Gemessen wird nach EN ISO 9614-2:1996

The measurement is carried out in accordance with EN ISO 9614-2:1996

Mesure effectuée selon la norme EN ISO 9614-2 :1996

Die Kühlung des Gerätes erfolgt durch eine elektronische Temperaturregelung so geräuscharm wie möglich und ist abhängig von der umgesetzten Leistung, der Umgebungstemperatur, der Verschmutzung des Gerätes u.a.m.

The device is cooled as quietly as possible with the aid of an electronic temperature control system, and depends on the amount of converted power, the ambient temperature, the level of soiling of the device is, etc.

Grâce à une régulation électronique de la température, le bruit du refroidissement de l'appareil est maintenu aussi faible que possible et dépend de la puissance transformée, de la température ambiante, du niveau de propreté de l'appareil, etc.

Ein arbeitsplatzbezogener Emissionswert kann für dieses Gerät nicht angegeben werden, da der tatsächlich auftretende Schalldruckpegel stark von der Montagesituation, der Netzqualität, den umgebenden Wänden und den allgemeinen Raumeigenschaften abhängig ist.

It is not possible to provide a workplace-related emission value for this device because the actual sound pressure level is heavily influenced by the installation situation, the power quality, the surrounding walls and the properties of the room in general.

Une valeur d'émission rapportée au poste de travail ne peut être indiquée pour cet appareil car le niveau de pression acoustique est fortement dépendant de la situation de montage, de la qualité du réseau, des cloisons environnantes et des caractéristiques générales du local.

SE GROUP

Exhibit ORS-MK-1

Curriculum Vitae

Mark D. Kane
Director of Community Planning and Design
Burlington, Vermont

Mark brings nearly 25 years of experience in environmental and land use planning and analysis to the SE Group team. Mark often focuses on the permitting and entitlement issues of projects, in addition to providing consulting and expert testimony related to aesthetic and land use alteration and developing strategies and techniques for promoting environmental sustainability on land development projects. Mark is a consummate strategist: as the principal overseeing all aspects of the company's land planning and design projects, he always has an eye on the bigger picture issues.

Mark's areas of expertise include:

- Regional and Land Use Planning
- Aesthetics and Environmental Impact Analysis
- Permitting and Entitlement
- Geographic Information Systems

REPRESENTATIVE PROJECTS – AESTHETICS AND VISUAL ANALYSIS

Timber Creek at Okemo, Vermont. As project manager and key expert witness, Mark worked with the developer of the Timber Creek project at Okemo in the Town of Ludlow. In addition to reviewing and providing expert testimony before the district environmental commission on Criterion 8, Mark also provided similar input to the Town of Ludlow process for the project. The work included detailed viewshed analysis for the project and a testing of the project's impact using the Quechee Test.

Jackson Gore at Okemo, Vermont. Working on behalf of the Okemo Mountain, Mark provided analysis and support on the development of new structures, a golf facility and other related improvements at Jackson Gore. The work included the development of an analysis report covering the visual aesthetic issues (using the Quechee Test), supportive viewshed analysis and simulation/perspective drawings and testimony before the district environmental commission and Town of Ludlow.

PROFESSIONAL AFFILIATIONS AND ASSIGNMENTS

American Planning Association (APA) – Member (2004-Present)

Northern New England Chapter of APA (NNECAPA) – Executive Council/VT Director (2013-Present)

Vermont Planners Association (VPA) – Executive Council Member (2013-Present)

American Society of Landscape Architects – Affiliate Member (2010-Present)

Colorado Chapter of the APA (COAPA)– Member (2014-Present)

Town of Fairfax, VT – Planning Commission (2013-Present)

Graham Environmental Sustainability Institute – External Advisory Board Member (2005-2008)

University of Massachusetts Amherst – New England Greenways Initiative Committee Member (2002-2003)

CONFERENCES AND PRESENTATIONS

2015 – APA Region 1 (Panelist, *Mad River Valley Economics Study*), Saratoga Springs, NY

2013 NNECAPA, Mills Falls, NH

2013 CO APA (Panelist, *Multi-Season Recreation Planning*,) Vail, CO

2012 Colorado Association of Ski Towns (*Multi-Season Recreation Planning and Communities*), Minturn, CO

2012 NNECAPA, Brunswick, ME

2011 NNECAPA (*Energy Development at the Community Scale*) – Burlington, VT

2010 National Ski Area Association Eastern Conference, Lincoln, NH

2009 International Wind Energy Association (IWEA), Chicago, IL

2008 International Association of Amusement Parks and Attractions Expo – Orlando, FL

2007 National Ski Areas Association Conference – Palm Springs, CA

2005 Urban Land Institute (ULI) – New York City, NY

EDUCATION

University of Vermont, School of Natural Resources, B.S. Environmental Studies, 1991

PROFESSIONAL EXPERIENCE

Director, SE Group, VT (2000- Present)
Principal, Dunn Hamelin Kane, VT- (1996-2000)
Senior Environmental Planner, WH&N, VT (1989-1996)

Killington Resort Master Plan, Vermont: Mark provided aesthetic analysis and testimony on behalf of the developer of the Killington Resort master plan. The project included both a parking lot expansion and a redevelopment of existing resort base areas into a new village complex. Mark testified on impacts through the Quechee Test process; covering issues related to land use compatibility and visual conformity.

Ferrisburgh Solar Farm, Vermont. As project manager and key expert witness, Mark worked with a local private developer on the permitting for a 1 MW photovoltaic solar farm located adjacent to a business state highway. The project was the first solar project proposed in Vermont of this size and generated a number of issues related to aesthetics and land use compatibility that were vital to address before the Vermont Public Service Board. Following review of materials and testimony provided by SE Group, the project was granted a Certificate of Public Good and began operations in 2010.

CRL Solar, Vermont. As project manager and key expert witness, Mark worked with a local private developer on the permitting 2+ MW integrated solar facility located adjacent to I91 in the town of Hartford, Vermont. While the project site was visually constrained, its proximity to the major highway required careful documentation of existing and proposed conditions and close coordination on effective mitigation strategies to less offsite impacts. The project was granted a Certificate of Public Good in 2011 and is awaiting construction in spring of 2012.

New Haven Solar Farm, Vermont. As project manager and key expert witness, Mark worked with a local private developer on the permitting 2 MW integrated solar and organic farming operation located along a busy state highway in a largely rural area of Vermont. The scale of the project required careful evaluation of potential impacts (aesthetic, noise, land use) to adjacent open lands and residential properties. A mitigation plan was developed, working with the regional planning agency, to ameliorate the visual impacts of the project. The project was granted a Certificate of Public Good in 2011. The project was appealed to the VT Supreme Court on aesthetic issues but the CPG was upheld. The Project is coming online in 2014

Charlotte Solar Farm, Vermont. Mark is actively engaged in the permitting and analysis for a 2.2 MW solar farm within an open meadow in a small rural town in Vermont. Working with the design team, Mark oversaw the development of visual and noise analyses and established a comprehensive mitigation strategy to address visual impacts of the project on adjacent residential properties. The project was granted a Certificate of Public Good in 2013.

Vermont Department of Public Service – Wind Energy Generation Aesthetic Analysis, Vermont. As project manager and principal expert witness, Mark has worked with the Department on its review of three major wind farm applications since 2005. Mark has directed the SE Group team as it analyzed the landscape-scale visual and noise impacts of these projects and addressed in reports and testimony, the compatibility of these large-scale wind generation systems with ridgelines and in sensitive environments. The analysis has included computer-assisted 3D graphics and visual simulations, noise monitoring, site reconnaissance and evaluation and GIS spatial modeling. Mark has provided input to the Governor of Vermont related to these issues and provides on-going assistance to the Department. Under these contracts Mark has worked on three large scale wind projects (Deerfield Wind, Sheffield Wind and Lowell Wind) and one community scaled project (East Haven Wind). All major wind projects have been granted Certificates of Public Good by the Vermont Public Service Board.

Utility Line Location Issues Paper, Vermont. Working on behalf of the Vermont Department of Public Service and the regulated electric utilities, Mark directed the preparation of a paper on state policy regarding the extension of distribution lines within the State. The goal of the project was to formulate policy options that addressed the land use, aesthetic and environmental issues often associated with line extensions. Included in this paper were substantive discussions of land use and sprawl impacts of infrastructure extension, costs of under grounding and overhead installation forms, economic equity and aesthetic mitigation.

Cellular Town Siting Analysis – Town of Milton, Vermont. Working with the Town Manager and Planner, a series of line-of-site analysis plates were created to evaluate potential cell tower sites

within the town. Using a 3D computer model of the site and LandSat thematic mapping information, a series of alternatives were evaluated and the amount of land by classification (commercial, industrial, etc.) within direct line-of-site for each alternative was calculated. Expert testimony was provided to the Chittenden Regional Planning Commission for this project.

Scenic Ridgeline Evaluation, Woodstock, Vermont. As part of the development of a new home and horse breeding farm, a study of three alternative house sites was conducted. Specifically, a scenic ridgeline district in Woodstock provided guidance to the developers on where sites would be most acceptable. Prepared a 3D computer model and GIS analysis of view sheds from each of these sites in support of proceeding with more detailed design plans. Viewsheds used digital elevation models and satellite land cover to derive the approximate extents that the rooftop and eaves could be viewed from. This was interpreted through the ridgeline district ordinance and will be used in discussions with the town. Testimony was presented to various town boards on the evaluation of this structure.

Site and Environmental Analysis; Nextel Communications, Vermont. Working with the site acquisition division of the firm, a series of projects for site around the state were completed to address visual analysis and aesthetic issues. Complex spatial analysis of viewshed and parcel data was completed on a number of projects throughout the State of Vermont as were 3D wireframes and photocomposition images to document existing and proposed tower configurations.

SUMMARY OF AESTHETIC AND LAND USE TESTIMONY IN PAST 5 YEARS

Case	Tribunal	Parties	Date	Description of Work
Bolton Wind	VT PSB	Bolton Valley Resort, Statutory Parties	Aug-09	Aesthetics – Quechee
Kingdom Community Wind- PSB Docket #7628	VT PSB	Green Mountain Power Corporation, Vermont Electric Cooperative, Inc., Vermont Electric Power Company, Inc., and Vermont Transco, LLC, John Nelson + Statutory Parties	Dec-09	Aesthetics – Quechee
Ferrisburg Solar Farm	VT PSB	Ferrisburg Solar LLC, Eagles Club, Statutory Parties	Feb-10	Aesthetics – Quechee
Leunigs Solar	VT PSB	Merrick Foods, LLC d/b/a Leunig's Bistro, Statutory Parties	Apr-10	Aesthetics-Quechee Historic
Middlebury Reliability Project – PSB Docket #7596/7597	VT PSB	Green Mountain Power, Bingham Statutory Parties	Jun-10	Aesthetics- Quechee
New Haven Solar Farm	VT PSB	Cross Pollination, LLC, John Madden, Town of New Haven,	Jul-10	Aesthetics- Quechee

Case	Tribunal	Parties	Date	Description of Work
		ACRPC, Statutory Parties		
VTA Bethel	VT PSB	Vermont Telecommunications Authority, Town of Bethel, Statutory Parties	Sep-10	Aesthetics- Quechee
Mount Snow Master Plan Act 250 Process	VT District Environmental Commission	Mount Snow, Statutory Parties	Oct-10	Aesthetics – Quechee
Heritage Flight	VT PSB	Heritage Flight, Statutory Parties	Nov-10	Aesthetics – Quechee
Hartford Solar	VT PSB	CRL Solar, LLC, Statutory Parties	Dec-11	Aesthetics- Quechee
Grand View Wind	VT PSB	Encore Derby Line Wind, LLC, Statutory Parties	Dec-11	Aesthetics-Quechee
Charlotte Solar	VT PSB	Charlotte Solar, LLC. Colvin, et al., Statutory Parties	Jan-12	Aesthetics-Quechee
Killington Resort Master Plan	VT District Environmental Commission	SP Land Company, Durkee, Statutory Parties, RRPC, WRPC	Aug-12	Aesthetics – Quechee
Killington Resort Master Plan	VT Superior Court	P Land Company, Durkee, Statutory Parties, RRPC, WRPC	Dec-14	Aesthetics - Quechee
North Springfield Biomass	VT PSB	North Springfield Sustainable Energy Poject LLC for itself and as agent for Winstanley Enterprises, LLC, Statutory Parties	Oct-12	Aesthetics-Quechee
Timber Creek at Okemo	VT District Env. Commission	Timber Creek, Okemo Ltd, RRPC, Statutory Parties	Dec-12	Aesthetics – Quechee
Barton Solar	VT PSB	Barton Solar LLC, Menards, Statutory Parties	Oct-13	Aesthetics-Quechee

Case	Tribunal	Parties	Date	Description of Work
Cold River Solar	VT PSB	Rutland Renewable Energy LLC, Joseph Romeo, Charles Flanders, Ted Hubbard, Robert Carrara Jr. as Trustee of the Robert Carrara Jr. Trust, and David Fucci, Statutory Parties	Nov-13	Aesthetics – Quechee
City Solar Garden	VT PSB	Rutland Renewable Energy LLC, Statutory Parties	Nov-13	Aesthetics-Quechee
Limerick Road Solar	VT PSB	Limerick Road Solar, LLC, Statutory Parties	Feb-14	Aesthetics-Quechee
Bridport Solar	VT PSB	Bridport Solar Holdings, LLC, Statutory Parties	Mar-14	Aesthetics-Quechee
Sudbury Solar	VT PSB	Sudbury Solar, LLC, Statutory Parties	Mar-14	Aesthetics – Quechee
Chelsea Solar Project	VT PSB	Ecos Energy LLC, Apple Tree HOA, Statutory Parties	May-14	Aesthetics – Quechee
Hartford Solar Project	VT PSB	Superior Solar LLC, Statutory Parties	Jul-14	Aesthetics – Quechee
AT&T/Richmond	VT PSB	AT&T Mobility/ATC	Aug-14	Aesthetics – Quechee
AT&T Brookfield	VT PSB	AT&T Mobility/ATC, Statutory Parties, Town of Brookfield	Oct-14	Aesthetics – Quechee
Royalton Solar	VT PSB	Novus Energy LLC	Dec-14	Aesthetic – Quechee
Berlin Solar -	VT PSB	Novus Energy LLC	Apr-14	Aesthetic – Quechee
Apple Hill Solar	VT PSB	Ecos Energy LLC	Mar-15	Aesthetics, Land Use
Williston Solar	VT PSB	GroSolar	2015	Aesthetic – Quechee, Land Use

Exhibit ORS-MK-2

Orchard Road Solar Project

Middletown Springs, Vermont

Aesthetics Assessment Report

Prepared by:

SE GROUP

06/21/2016

Contents

Part I: Project Background 1
Section A: Scope of Work 1
Section B: Project Description and Visual Context 2
General Description 2
Visual Context 2
Section C: Evaluation Methods and Approach 3
Part II: Quechee Analysis 4
Section A: Viewshed Determination 4
Views from Adjacent Residential Areas: 5
Section B: Assessment of Potential Visual Impacts 6
Test for Adverse Impact: 6
Conclusion of Adversity: 9
Test of Undue Adverse Impact: 9
Part III: Overall Conclusion 16

List of Figures

Figure 1 – Context/Viewshed Plan
Figure 2 – Site Plan
Figure 3 – Site Photographs
Figure 4 – Site Photographs
Figure 5 – Site Photographs
Figure 6 – Site Photographs
Figure 7 – Site Photographs
Figure 8 – Site Photographs
Figure 9 – Site Section- A
Figure 10 – Mitigation Planting Plan

Part I: Project Background

Section A: Scope of Work

Pursuant to Title 30 Section 248 governing the review of energy generation facilities and transmission projects, SE Group has prepared an analysis of potential aesthetic impacts of the Orchard Road Solar Project ("Project"). The scope of this assessment addresses the requirements under section 248(b)(5). Section 248(b)(5) of Title 30 of the Vermont Statutes Annotated requires that the Vermont Public Service Board find a proposed project will not have an "undue adverse effect" on a proposed project site's aesthetics, which the Vermont Public Service Board assesses utilizing the following two-part test ("the Quechee Test" or Quechee Analysis):

> *In order to find that it will have an adverse impact, a project must be out of character with its surroundings. Specific factors used in making this evaluation include the nature of the project's surroundings, the compatibility of the project's design with those surroundings, the suitability of the project's colors and materials with the immediate environment, the visibility of the project, and the impact of the project on open space. The next step in the two part test, once a conclusion as to the adverse effect of the project has been reached, is to determine whether the adverse effect of the project is "undue." The adverse effect is considered undue when a positive finding is reached regarding any one of the following factors:*
>
> 1. *Does the project violate a clear, written community standard intended to preserve the aesthetics or scenic beauty of the area?*
> 2. *Have the applicants failed to take generally available mitigating steps which a reasonable person would take to improve the harmony of the project with its surroundings?*
> 3. *Does the project offend the sensibilities of the average person? Is it offensive or shocking because it is out of character with its surroundings or significantly diminishes the scenic qualities of the area?*
>
> *Our analysis, however, does not end with the results of the Quechee test. Instead, our assessment of whether a particular project will have an "undue" adverse effect on aesthetics and scenic or natural beauty is "significantly informed by overall societal benefits of the project."*[1]

[1] *In re Vermont Elec. Power Co., Inc.*, Docket No. 6860, Order of 1/28/05 at 79 (footnotes omitted).

Section B: Project Description and Visual Context

General Description

The Project is an approximately 500 kilowatt (kW AC) net metered solar electric generation facility located off of Wescott Road in Middletown Springs, Vermont and will generate net metering credits to offset Goddard College's electric bill and other members of a net metering group. The Project will be sited on 5 (+/-) acres of leased land that is part of a larger (approximately 126 acres) former apple orchard near the height of land off of Orchard Road. The Project is sited approximately 135' south of Wescott Road and 400'west of Orchard Road. The project site currently consists of mature old apple trees, open meadow, and volunteer deciduous scrub growth. The immediate area of the Project, as well as some vegetation south of the panels will require some clearing to allow for installation and limit shading on the panels. The remainder of the project parcel, including areas between the Project and surrounding roads and neighboring parcels will remain vegetated.

The Project will use a fixed tilt solar racking system anchored to driven posts and set at an angle of approximately 30 degrees. The racking will run east-west and the panels will face due south. The rear of the panels will face Wescott Road north of the Project. The bottom of the panels are approximately three feet above grade to clear winter snow pack and approximately nine feet from the ground at the top. The entire Project will be surrounded by a 7 to 8' tall fixed-knot fence with 6-inch spacing attached to wood posts.

Power from the Project will run underground from the site to a new riser pole on Wescott Road. Existing roadside power poles along Westcott Road will be upgraded to provide an overhead connection for the Project including a new interconnection pole at the intersection of Wescott and Orchard Roads. Three new 167 kVa transformers will be placed on a power pole and a 10'x20' concrete equipment pad will be located in the northwest corner of the site. The equipment and panels will be accessed via a new 12' wide gravel access drive built in the location of the current field access off Wescott Road. Grading and soil disturbance is limited to the area of the new access drive and required trenching for the electrical conduit from the panels/inverters to the equipment pad and transformers.

Visual Context

The Project sits on a broad hillside south of Route 140 about 1.5 miles west of the village of Middletown Springs. The site is elevated approximately 190' to 250' above Route 140 and the Poultney River, which lie in the valley at the base of the hill. A taller mountain range/hillside running north-south sits to the west and serves as a backdrop to the project site. The Project site slopes downward about 60' in grade towards the northeast and Route 140. The land along Route 140 is characterized by open agricultural fields and farmland, with clusters of farm buildings and residential properties. Vegetation along Route 140 and the Poultney River is primarily deciduous. Larger blocks of evergreen vegetation surround major drainages

coming down from the hillsides to the river. The ranges and hillsides feature dense deciduous vegetation. The open field of the project site stands out from the heavily wooded hillside.

Due to the topography and existing vegetation, the Project is generally screened from the majority of public vantage points and residences. The hillside topography helps screen the Project from travelers along Route 140 and Orchard Road at the base of the hill. Father from the site, the Project and hillside becomes more visible to travelers heading west along a portion of Route 140 that is over a mile away. The taller range/hillside west of the project site provides the backdrop to the view. Within the one-mile radius of the project site, the Project becomes intermittently visible from a section of Route 140 as well as a portion of Orchard Road that is at a similar elevation and due east of the Project. Across the valley, north of Route 140, the topography rises up from the river to another hillside. This hillside is more developed with several clusters of farms and residential homes located off private drives in the edge of the forest. The nearest home on the hillside is approximately 3,000' away.

Wescott Road, from the forest woodline (Photopoint K) east towards the intersection with Orchard Road (Photopoint F) has clear visibility of the project site, although existing deciduous roadside trees and brush will effectively add to the Project screening when leafed-out. Orchard Road is a two-lane dirt road with an existing residence and barn as well as several other residences beyond the project site to the north. Wescott Road is a single-lane dirt road with several seasonal cabins/residences west of the project site. Wescott Road provides access to commercial logging operations.

The aesthetic character of the landscape and the built environment in the area surrounding the project site reflects the rural and agricultural nature of Middletown Springs. The existing hedgerows, farms, fields, and agricultural structures are extensive throughout the surrounding landscape. These features are set against the backdrop of taller ridges and hillsides surrounding the valley.

Section C: Evaluation Methods and Approach

To complete our assessment, we have thoroughly reviewed the Applicant's engineering and design materials and documents to understand the project scope and scale, its location, characteristics and setting. We have also sought additional information on the Project and its setting from published sources including Town and Regional Plans, atlases and statistical records.

Second, we reviewed the potential viewshed of the Project initially using Geographic Information Systems (GIS), AutoCAD, and Google Earth tools. After defining the likely extent of the viewshed, we performed a field visit to analyze the project visibility and identified several key viewpoints from which the proposed solar field might be seen. We collected photographs and catalogued landscape and visual resource characteristics from these viewpoints. A more detailed discussion of how we determined the viewshed can be found in Part II–Section A.

We evaluated these technical factors (where can it be seen, what would it look like, etc.) against the qualities and sensitivities of the visual environment. We have employed several techniques for this process that blend the quantitative and qualitative aspects of visual analysis. These have all been combined into a final analysis of visual impacts resulting from the Project using the Quechee Analysis. This process is described in detail in Part II of this report.

Part II: Quechee Analysis

Section A: Viewshed Determination

The relatively low heights of the panels, at approximately nine feet, that comprise the array greatly limit potential visibility. Because of this low height, small changes in micro-topography, areas of mature woodlands, and other structures can have a significant influence on the extent of the viewshed. Traditional GIS tools, relying on digital elevation models, are not reliable to define a viewshed for this type of proposed use. The vertical accuracy of such models is generally larger than the actual height of the proposed panels.

Rather than relying solely on a GIS-based viewshed analysis, our work also involved reviewing the project site plan and conducting a photographic reconnaissance of the area. During this reconnaissance we noted the qualities of setting, the position of the Project relative to public observation points and how structures, vegetation and micro-topographic changes influence potential visibility.

Views from Public Vantage Points:

As stated earlier, the project site lies roughly 200'+/- above Route 140, the main east-west travel way heading into Middletown Springs (Site Section-A, Figure 9). The elevated location of the project site as well as the surrounding topography and hillsides greatly diminishes the visibility of the Project. The Context/Viewshed Plan (Figure 1) of the assessment identifies locations within the immediate vicinity that that have either clear project visibility (Red Locations) or limited/intermittent project visibility (Green Locations). The greatest area of public visibility of the Project is from Route 140 heading west out of the village for approximately 1,700' as you approach Tarbell Farm. From this location the project site is partially visible above the evergreen block of woods beyond Coy Hill Road (Photopoint A and B). The evergreens block the lower portions of the site (to the northeast) while the upper portion of the site rises above the trees (to the southwest). From this location along Route 140, the project site is approximately one mile away, making the Project more difficult to discern and significantly reducing the visual dominance of the Project in the viewshed. The photos were taken in April, prior to leaf-out on the trees. Following leaf-out, vegetation within the site as well as between the project site and viewpoint should further screen the project site from this location.

Following this area of visibility from Route 140 is an additional 2,000' where the Project has intermittent visibility as objects in the foreground such as residential structures, barns, and roadside vegetation interrupt the clear view of the project site. Any visibility of the project site from Route 140 ends just west of Buxton Ave/Coy Hill Road due to increased vegetation and the topography of the hillside. Travelers on Buxton Ave/Coy Hill Road may have a very slight view of the northern section of the project site, just visible above the evergreen trees in the foreground (Photopoint C). The Buxton Ave/Coy Hill Intersection with Route 140 is approximately 3/4 mile away from the project site, again reducing the visual dominance of the Project in the viewshed.

Figure 1 also identifies Wescott Road in front of the project site as an area of project visibility. The intersection of Wescott and Orchard Roads is approximately 55 feet in elevation below the northeast corner of the project site. The setbacks to the Project in addition to the topography and existing deciduous and evergreen vegetation to remain will screen the majority of the Project from the intersection (Photopoint F). Heading west on Wescott Road, the road grade levels off with the project site and the existing vegetation diminishes, opening views to the project site (Photopoints I-K). From these locations the backside of the panels, project fence, and pole-mounted transformers, and equipment pad will be visible from the single lane dirt road. There is some existing deciduous vegetation at the edge of the road, as well as some apple trees to remain that will provide some screening of the Project, particularly when leafed-out.

The project site will be somewhat visible from a short 500' section of Orchard Road near its intersection with Wescott Road. The project site continues to rise up from Orchard Road, with clusters of dense, mature apple trees to remain between the project site and the road (Photopoint G). The sides of the panels on the project site will be intermittently visible from this section of roadway due to the topography and vegetation.

Although the project site is visible from Route 140 for an extended section, several factors diminish the impact of the Project on travelers heading west. These include:

- Project Distance from Roadway- 3/4 mile – 1 mile away from Project
- Elevation Gain and Topography- Project sits 200'+/- above Route 140
- Vegetation- Evergreen Woods between Orchard Road and Coy Hill Road and Deciduous Roadside Vegetation provide partial screening of project site
- Hillside/Range Beyond- The project site is set against the backdrop of the taller hillside behind it to the west (as seen from Photopoints A-D)
- Project Orientation- panels facing due south present the rear or northern side to the viewer, which tend to be lighter color and will blend into the landscape.

Views from Nearby Residential Areas:

There are several residential properties in the vicinity of the Project that may have views of the Project, predominantly from the opposite hillside north of Route 140. The nearest residences across the valley are approximately 3,000' away. The residential clusters have intermittent views of the Project as the topography

and existing vegetation both near the project site and near the residences will interrupt clear views of the Project. In addition, the residences will be looking predominantly at either the rear or sides of the panels from the northern and northeastern vantage points.

During our site visit we also observed a seasonal cabin west of the project site on Wescott Road that is approximately 400 feet away from the panels. The cabin is oriented to the northeast towards the valley view, however, the project site including the panels, transformers, and equipment would be seasonally visible to the east during leaf-off conditions. During the spring and summer months during leaf-out, the project site will be minimally visible. Additionally, there is an undeveloped parcel of land immediately abutting the western project boundary.

Section B: Assessment of Potential Visual Impacts

Having identified the extent of the views and completed an analysis of representative views from the Project, the next step is to prepare an assessment of potential impacts using the Quechee Analysis. This process first tests whether the proposed Project's impacts are adverse. Second, assuming a conclusion that the Project would have an adverse aesthetic impact, the process continues to determine whether or not that impact would be undue.

Test for Adverse Impact:

The Quechee Analysis asks five basic questions, which are then used to determine whether the Project would result in an adverse impact with respect to the visual resource. These questions are:

1. **What is the nature of the project's surroundings? Is the project located in an urban, suburban, rural or recreational resort area? What land uses presently exist? What is the topography like? What structures exist in the area? What vegetation is prevalent? Does the area have particular scenic value?**

   The site sits within a sloping former apple orchard/open agricultural field elevated above Route 140 and set within a rural area with farms and residential uses interspersed throughout. The center of Middletown Springs is located 1.5 miles to the east of Orchard Road with limited commercial and civic uses including St. Anne's Parish, the Public Library, Elementary School, Community Church, and Village Store. Farming and agricultural uses tend to border Route 140 in the valley, while the higher elevations on the hillsides have some fields but are predominantly forested. The vegetation throughout the area consists of deciduous trees and hedgerows, both surrounding the roads and rivers as well as on the upper hillsides, with larger blocks of evergreen forest including spruce and eastern white pine bordering some of the drainages and mid-elevations of the hillsides. The particular hillside where the Project sits does have some scenic value because of its function as part of the greater landscape. From the distant views along Route 140, portions of the open hillside of the former orchard are partially

visible and sit above the foreground fields, but below the height of the ridgeline beyond. The closer view of the hillside from the intersection of Route 140 and Orchard Road (Photopoint D) is of higher value due to the observation of the defunct apple orchard, residential property, and ridgeline beyond. The project site is not visible from this location.

2. **Is the project's design compatible with its surroundings? Is the architectural style of the buildings compatible with other buildings in the area? Is the scale of the project appropriate to its surroundings? Is the mass of the structures proposed for the site consistent with land use and density patterns in the vicinity?**

The Project is compatible with the agricultural use of the site, and the surrounding rural residential uses.[2] The low height of the Project components do not extend beyond typical building heights in the area, or disrupt long range views in the area. The Project has been sited on the lowest portion of the field which helps minimize the long range views of the Project.

3. **Are the colors and materials selected for the project suitable for the context in which the project will be located?**

The materials and colors of the Project are consistent with materials and forms used in many similar solar projects. The galvanized metal/gray color of the frames and racks that support the photovoltaic panels are less visible during winter. The photovoltaic surfaces are non-reflective and a dull, dark blue color that has a similar albedo (or surface reflectivity) to natural grasses, meadows and fields. The face of the panels will face south, away from observers on Wescott Road and Route 140.

The proposed equipment pad will be located within the project fence line, set approximately 120' from the property line, and generally screened from view by existing and proposed vegetation. The pole mounted transformers proposed near the roadway and are similar in size and style to other pole mounted transformers within the vicinity of the Project.

The supporting elements of the Project include the 7 to 8' foot high, fixed-knot fence that surrounds the solar field. Wooden posts will be used to support the fence. The fence is of a form typical for enclosure of utility projects and other large areas. The mesh itself is not visible from any location outside of the project site; its color helps it visually retreat. The use of wooden posts is an appropriate option in this context.

[2] The Public Service Board has recognized that commercial scale solar projects are compatible with all of these land uses. See Docket No. 7645, Order of 7/8/11 at 5.

4. **Where can the project be seen from? Will the project be in the viewer's foreground, middleground or background? Is the viewer likely to be stationary so that the view is of long duration or will the viewer be moving quickly by the site so that the length of view is short?**

As described above, there are two areas of high visibility along Route 140 and Wescott Road (marked in red on Figure 1) and several areas of low/intermittent visibility (marked in green on Figure 1). All other areas of public roadways surrounding the Project should have little to no visibility of the Project. In areas of higher visibility, there is little interrupting vegetation and relatively open views of the Project, in the background from Route 140 (Photopoints A and B), and in the peripheral fore to middleground from Wescott Road (Photopoints I-K). In areas of relatively low visibility there is generally existing vegetation that would filter, and partially obscure, the view of the Project providing limited views of portions of the Project. These views would also occur in the background from Route 140 (Photopoint C) and middleground viewing distance from Orchard Road (Photopoint F-G).

The speed limit on Route 140 near Orchard Road is 40 miles per hour. The view window from Route 140 with higher visibility is approximately 1,700' and takes approximately 29 seconds to travel (identified as the red area on Figure 1). The area of intermittent view from Route 140 is approximately 2,000' long and takes approximately 34 seconds to travel (identified as the green area on Figure 1). Combined, this is just over one-minute of travel along Route 140 heading west with some visibility of the Project in the distance. As mentioned previously, the distance of the Project from both areas of visibility on Route 140 will make the Project difficult to discern and significantly reduce the visual dominance of the Project in the viewshed.

Wescott Road is a single lane dirt road with steep grades and vegetation on both sides of the road. The road is not posted but speeds range from 10-15 miles per hour. Traffic volume on Westcott road is relatively low, significantly limiting the number of potential viewers. Travel time from the edge of the woods where project visibility begins to the intersection with Orchard Road (850' distance) takes approximately 36 seconds. The view from the western portion of Wescot Road into the project site will provide more of a view to the Project, whereas views from the eastern portion of Wescott Road near the Orchard Road intersection will be more limited due to steep topography and dense existing vegetation. The view from Wescott Road to the north is of the Route 140 valley below and the hillside opposite the valley.

5. **What is the project's impact on open space in the area? Will it maintain existing open space or will it contribute to the loss of open space?**

The Project requires the use of 5 acres out of a 126 acres tract of land that was previously an apple orchard. The Project requires minimal clearing of existing vegetation, mainly orchard trees and volunteer trees and shrubs within the field. After construction is complete, the ground will be seeded and maintained as meadow, being mowed once or twice annually. The Project will not result in a long-term loss of open space in the region. The Project site is not identified for conservation in the Town or

Regional Plans. The components of the Project (panels, fencing, and transformers) can be easily removed and the land restored swiftly.

Conclusion of Adversity:

The Project does alter the existing conditions and use of the site and this must be addressed in our analysis. As noted above, there are areas of both higher and lower visibility of the Project. While the hillside where the Project sits is scenic and the Project is visible for a portion of Route 140 while traveling west, the Project is a small portion of a much broader scenic view of the hillside and range. Existing vegetation both on the project site, in the middleground, and along the roadway help to screen portions of the Project.

The project impact on Wescott Road and the surrounding properties is greater due to the proximity, but the Project is generally set well back from public views and existing vegetation is being maintained between the Project and the surrounding roads and properties. The Project meets and exceeds the minimum required setbacks from public roads and property lines. The panels are a minimum 135' from Wescott Road, 140' from the western property line, and 400' to Orchard Road to the east.

Given the above, and without regard to mitigation, we conclude that the Project **does** create an adverse aesthetic impact on the visual resources. Because of that, and in keeping with the Quechee Analysis process, we will continue to test whether these impacts rise in severity so as to be undue.

Test of Undue Adverse Impact:

The Quechee Analysis process continues by evaluating whether the impact of the Project would be unduly adverse. This is done by addressing three fundamental questions:

1. **Does the project violate a clear, written community standard intended to preserve the aesthetics or scenic beauty of the area?**

   No. Although Section 248 does not require local permitting of projects seeking a Certificate of Public Good, local plans and regulations are reviewed under the second prong of the Quechee analysis where it has been determined that a Project may have a potential adverse visual impact. The Public Service Board has noted that "[i]n order for a provision to be considered a clear, written community standard, it must be "intended to preserve the aesthetics or scenic beauty of the area" where the proposed project is located and must apply to specific resources in the proposed project area." Petition of Georgia Mountain Community Wind, LLC, Docket No. 7508, Order of Vt. Pub. Serv. Bd. (Jun. 11. 2010) at 52. The Board clarified that generalized statements and general scenic resource policies that are not focused on a particular scenic resource or that fail to offer specific guidance or measures to protect the resource cannot be considered "clear written

community standards." Id. at 53. Finally, this analysis is significantly informed by the overall societal benefits of the project.

We have, as part of our analysis, reviewed the local and regional plans relative to this criterion.

Middletown Springs Town Plan (2012): The most recently adopted Middletown Springs Town Plan ("Town Plan") was adopted on March 6, 2012 and covers a wide variety of factors influencing development within the community. Below are some key elements of the Town Plan that are relevant to consider for the Project.

The future land use designation for the Project site is Rural as identified in the Town Plan. These rural lands make up most of the Town and are "defined as the lands around the village, extending to slopes too steep for agriculture. (See "Future Land Use" map). It includes all farmland, residential lots outside the village, and forestland." The rural area is characterized by extensive parcels of croplands and farmsteads, open spaces with some small sections of woodlots, and scattered low density residences along the roads of the area. The goal for this area as defined in the Town Plan is to "maintain attractive countryside with large tracts of open land in diversified agricultural uses." Additionally, the lands on which the Project is proposed are NOT identified as "Highland Conservation Area" or "Lowland Conservation Area" on any of its existing and/or future land use plans.

The Town Plan states an interest in preserving scenic qualities of the Town in the introduction to the Land Use Chapter by stating "The preservation of agriculture, the protection of scenic ridgelines, and a compact village hub are integral to the character of the Town," but the Town Plan does not provide any specific guidance or mechanism for protection of scenic resources. The Land Use Strategies for the Rural District recognizes the importance of scenic lands by suggesting the Town "foster awareness of private or foundation funding to purchase conservation easements and development rights of prime agricultural and scenic lands," but again does not provide a clear, written community standard "intended to preserve the aesthetics or scenic beauty of the area."

The Town Plan also briefly addresses energy in Chapter III Section J of the Town Plan, "Energy." The Town Plan does not directly reference solar development in the Town, but does indicate general support for solar energy production with the following statement: "Sources [of energy production] that have the least environmental impact and which are renewable are most desirable, but can be more costly." The Town Plan also highlights the importance of solar power by referencing the SolarFest Event with the following statements: "Middletown Springs community members form the core planning and implementing team of SolarFest (www.solarfest.org), one of the largest festivals in the U.S. devoted to renewable energy education. The energy education festival is held each July in Tinmouth. Many Middletown Springs community members either volunteer at or attend the three-day festival each year. The event features energy education workshops, renewable energy vendors and demonstrations, and solar powered entertainment." Relevant energy strategies include: "2. Provide practical information about available alternative

energy technologies;" and "3. Continue strong community support for SolarFest, an important annual energy education event."

Additionally, SE Group did not find any town bylaws or ordinances that specifically address the screening of solar installations.

Overall, the Town Plan does not provide any clearly written community standard on which the potential aesthetic impacts of the Project could be applied. The proposed use is of a scale and form that is visually compatible with the area and represents a land use form that does not preclude long-term reuse of the property following the decommission of the facility.

Rutland Regional Plan (2015): The 2015 Rutland Regional Plan ("Regional Plan") is the guidance document prepared by the Rutland Regional Planning Commission (Rutland RPC) which provides an overarching policy framework for land use and development within the region. However, as a regional document, it affords considerable deference to local land use policy. It does provide insight in addressing changes in land use pattern of development in light of regional objectives.

The project area is located within the "Low Density Development" zone on the Regional Future Land Use Map, which comprises much of the region. As noted in the Plan, "Areas shown as "low density" on the map are Rutland County's working landscapes. They include areas with small, historic hamlets as well as actively farmed or logged terrain." Looking to the future, the Regional Plan suggests that "agricultural and silvicultural activities should continue to dominate the Region's low density areas. Development in low density areas should be unobtrusive and maintain the rural character and scale of the locale." As detailed throughout this report, with mitigation, the Project is not expected to disrupt the rural character of the area.

The Regional Plan has several sections which are relevant in consideration of the Project. Chapter 14 identifies the scenic resources of the region noting the "rugged mountain ranges, clear streams, and fertile valleys" that comprise the region and explaining that "these scenic resources have not only attracted numerous residents over time, they also are a major draw for visitors and a vital part of the Region's economic well-being." The Current Conditions also note that "wind and solar energy generation facilities can also lead to habitat fragmentation." In Chapter 14 the Rutland RPC discusses goals for new development with respect to the scenic resource: "No land development should be promoted where the effect of the proposed use unnecessarily impacts highly scenic landscapes, ecologically sensitive lands, or irreplaceable natural resources. To do so would be incompatible with land use policies contained in the Regional Plan." The current project is not expected to unnecessarily impact an identified "highly scenic landscape."

The Rutland RPC Goals in Chapter 14 also state: "Since new development has the potential to fragment natural habitat, all developments must: … 'Be of a design that is compatible with surrounding land uses…' " The Public Service Board has recognized that commercial scale solar projects are compatible with all of the land uses surrounding this Project. See Docket No. 7645, Order of 7/8/11 at 5.

Finally, the Rutland RPC Goals in Chapter 14 also have a small note under the heading “Energy Development” as follows: “Assist municipalities in identifying areas for renewable energy development so as to not adversely impact wildlife and natural habitats.” This general goal has not yet been implemented.

Chapter 16: Energy also contains several sections which are relevant in consideration of the Project. In the “Current Conditions” discussion under the heading “Renewables” the Regional Plan notes, “Vermont is promoting the development of renewable energy sources to address climate change and reduce reliance on fossil fuels, and increase energy options available locally. However, new energy generation also must avoid undue adverse impacts on local communities and the environment.” As demonstrated throughout this report an undue adverse impact is not expected as a result of this Project.

A relevant comment about solar project siting is also provided in the “Current Conditions” discussion under the heading “Solar”: “However, siting issues over solar generators have arisen in the Rutland Region because of the proliferation of solar, particularly 150 kW and greater utility-scale and commercial PV systems. There is concern that these systems in particular could be responsible for an undue loss of prime agricultural land, forests, wetlands and property values of neighbors. Questions over the regulatory process for solar generating facilities also arose with many municipalities feeling like they are lacking a voice.” This report has found that an undue adverse impact to the scenic resource is not expected as a result of this Project. Additionally, the Petitioner has worked to develop appropriate and context sensitive mitigation strategies to address potential visual impacts of the Project.

The Regional Plan also provides two helpful sidebar discussions relevant to the proposed Project also found in Chapter 16: Energy. The first is entitled “What Municipalities May Not, May and Shall Do in Regulating Energy Development (24 V.S.A. Chapter 117).” This sidebar correctly identifies what municipalities in Vermont may not do and are required to do with respect to regulating energy development. It also suggests a series of actions municipalities may take using local land use regulations and the municipal plan (the Town of Middletown Springs does not have local land use regulations). The relevant actions suggested are as follows:

- ***Provide clear written standard to preserve the aesthetics or scenic beauty of an area and identifies conservation needs, orderly development, and is based on “Quechee Analysis” legal precedent.*** As noted above, the Middletown Springs Town Plan has not provided a clearly written community standard intended to preserve the scenic beauty of the area in which the Project is located.
- ***Grant waivers to reduce dimensional requirements for energy conservation and renewable energy structures.*** The Town Plan has not granted any such waivers.
- ***Provide for and protect access to renewable energy resources (e.g., under site plan and subdivision review).*** The Town Plan has not provided or protected any such access.

The second helpful sidebar discussion in the Regional Plan is entitled "Proposed Regional and Community Standards for Energy Facility Siting & Development (for Regional and Municipal Plans and Act 250/ Section 248 Proceedings)." This sidebar discussion section lays out standards for particular types of energy transmission and generation facilities (including solar projects). The discussion states, "Where a new generation facility requires a new transmission facility, including electrical substations, both the generation and transmission standards shall apply."

It is important to recognize several factors in addressing these "standards". Firstly, as the plan document states, "the standards below are not the exclusive standards and are intended to apply along with policies elsewhere in the Rutland Regional Plan." Secondly, these are "proposed" standards that have not been adopted (in part or in whole) by the locality. From this perspective, while not formally adopted, the Project has considered the relevant items as part of this review:

Photovoltaic and other solar electricity facilities shall be designed, constructed, and operated such that:

1. The facility is located to make use of a developed or existing structure or brownfield site, including parcels contaminated or perceived to be contaminated that otherwise hinders redevelopment, so as to avoid primary agricultural soils and silvicultural areas. The Project largely avoids prime agricultural soils, soils of statewide importance and soils of local importance with only about 3,500 square feet of impact to such soils. The Project is not located on a brownfield or contaminated site. The amount of clearing is relatively small and essentially involves removal of second growth and scrub species. Despite being located outside of a brownfield or contaminated site, SE Group finds that the Project has given substantial deference to the regional plan guidance by largely avoiding primary agricultural soils, providing reasonable mitigation, and working with the Town and local neighbors. Additionally, the components of the Project (panels, fencing, and transformers) can be easily removed and the land restored at the end of the Project life, if redevelopment is desired.

2. The facility is designed to locate inverters and support structures away from existing residences, wetlands, special flood areas, and slopes. Inverters and support structures have been located away from existing residences (over 400' to nearest residence), wetlands, special flood areas, and slopes.

11. Any proposed facility shall consider the cumulative impact of land use aesthetics, property values, and landowner compensation for multiple energy generation and transmission facilities. SE Group, as appropriate under the Quechee Test, considered the context of the Project as part of its review. In this review, SE Group did not identify any nearby energy generation or transmission facilities that would contribute to the existing scenic context for the viewshed.

In this case, the Regional Plan provides regional objectives for this type of development, but Town objectives are less clear from the Town Plan. The Regional Plan provides proposed "standards"

relevant to energy development, but does not identify the Project setting as a scenic resource. Having reviewed these "standards," we conclude that the Project addresses and satisfies them.

While the Project will undoubtedly introduce an element that is different from what exists today, the intention of these proposed "standards" is not necessarily to prevent new forms of development but rather minimize the impact of such development. The viewshed for the Project is limited and, unlike other types of land uses that might exist on the site, the development of a solar project minimizes many direct impacts (significant terrain modification, soil disturbances, tall buildings or structures, and major roads) and secondary impacts (nighttime lighting, noises, and traffic).

Overall, SE Group finds the Project **would not violate any clearly written community standard** in the Town Plan or Regional Plan on which the potential aesthetic impacts of the Project could be applied. The proposed use is of a scale and form that is visually compatible with the area and represents a land use form that does not preclude long-term reuse of the property following the decommissioning of the facility

2. Has the Applicant failed to take generally available mitigating steps which a reasonable person would take to improve the harmony of the proposed project with its surroundings?

The Project has taken steps, integral to the site selection and design of the facility, which help minimize its visual impact and improve its harmony with the visual context:

a. Petitioner has chosen a site that is over 1,800' from a major public roadway and sited over 100' from the nearest lower volume minor public roads. Topography of the surrounding landscape and existing vegetation helps diminish the visual impact of the Project. The nature of this Project allows the property to be restored to its current condition relatively easily.

b. Petitioner has placed the panels comprising the solar field on slim mounting brackets, neutral gray in color, that follow the natural terrain of the land to minimize its profile.

c. All of the electrical collection lines for the Project will be buried. Only one new pole will be needed to connect the Project to the grid, while three additional poles and overhead power will also be upgraded.

d. The photovoltaic surface of the panels are non-reflective and do not create glare. Additionally, the panels face south, away from public roads.

e. Petitioner has chosen fixed-knot fence with minimal visual impact profile to secure the site. The mesh of the fence is very difficult to discern even at very close distances.

In addition to the above and recognizing the potential for views from Route 140, Wescott Road, and the neighboring properties, SE Group has recommended a number of landscape mitigation measures be

taken to improve the harmony of the Project with respect to its surroundings and provide additional project screening. The Petitioner has worked with SE Group and the Town to develop appropriate and context sensitive mitigation strategies to address potential visual impacts of the Project (Figure 10).

Mitigation for the Project is intended to supplement the existing vegetation located both on-site and within the immediate area that already provides some screening of the Project. These plantings will be field located on site in coordination with the existing orchard trees to remain and in consideration of the views towards the Project.

Three mitigative zones are proposed:

A. East/Northeast of the Project: A hedgerow of Eastern White Pine is proposed to supplement the existing block of evergreen pine and spruce located off-site around the drainage to the east of the project site. The existing mature pines screen the lower portions of the Project. The proposed new white pine will be planted in the gaps of the existing vegetation as viewed from Route 140 and will break up the view of the upper portions of the project site as the trees grow. The pines are planted 100' east of the panels and slightly downhill. Visibility of the newly planted trees from Route 140 may be limited at first as they may be nearly the same elevation as the tops of the existing evergreens in the drainage. Over several years as the pines grow they will start to increase in height and screen the upper portions of the project site, which currently rises approximately 30'-40' in grade above the tops of the existing evergreens.

B. West of the Project: A hedgerow of Eastern White Pine is proposed west of the Project, focusing on screening the view towards the panels, equipment pad, and pole mounted transformer from both Wescott Road and the seasonal cabin.

C. North of the Project: To the north of the project site, a mix of deciduous trees, shrubs, and evergreen trees are proposed to screen the view of the Project both from Route 140 and from Wescott Road. At the access drive, a line of Sugar Maples is proposed to line the drive to screen the equipment and transformers and reflect the agricultural character of the site. North of the project fence, several clusters of native serviceberry are proposed to break up the mass of the Project as seen from Wescott Road. Several more white pines are propsed in the northeast corner to supplement existing vegetation and help screen views of the Project from Route 140 and as you approach along Wescott Road.

The mitigation planting is identified on Figure 10 along with a plant species list, quantities, and supportive descriptions. The Petitioner will continue to review the Mitigation Planting Plan with the Town and local residents to refine the landscaping plan and make sure it is consistent with the expectations of the Town. The mitigation planting may continue to be refined through this process and updates will be provided if changes are made. With the Mitigation Planting, we believe the Project **has taken**

generally available mitigating steps that a reasonable person would take to improve the harmony of the Project with its surroundings.

3. **Does the project offend the sensibilities of the average person? Is it offensive or shocking because it is out of character with its surroundings or significantly diminishes the scenic qualities of the area?**

   No. We **do not** believe that the Project would offend an average person. Its scale, mass and form are not so out of character that they are offensive nor do they diminish or distract from the scenic qualities of the area. Within the broader landscape, the Project does not alter the existing scenic qualities. The Project is set on a site that does not permanently degrade or diminish long-range views, which are noted for having high scenic qualities. The Project does not impede or degrade regional landscape forms visible in the surrounding areas.

   Further, the primary viewshed of the Project from Route 140 and Wescott Road can be effectively mitigated by supplementing existing vegetation with additional landscape planting. Impacts to adjacent residential properties, while not necessarily reflective of "average persons" are minimized by the retention of existing vegetation and the addition of the mitigative steps.

   The Project does not introduce secondary factors which often can contribute to how a project "fits" into its setting. These factors include such things as traffic, noise, exterior lighting, dust, odors, glare or other nuisances which often are at the root of public objections.

Part III: Overall Conclusion

SE Group believes that the Project has addressed its setting in a very balanced way. It has chosen a setting that provides significant visual isolation for the Project (being over 1800 feet from any public roadway) and limits impact to the extent practical. Based on our assessment, it is our conclusion that the Project **does not create an undue adverse impact** to the aesthetics or scenic beauty of the area.

Part IV: Orderly Development of the Region - Section 248(b)(1)

SE Group has also reviewed the Project relative to Section 248(b)(1), Orderly Development of the Region. As noted above, the land on which the Project is proposed has not been identified for any land conservation purposes. Middletown Springs has identified two areas (Highland Conservation Areas and Lowland Conservation Areas) which respectively include important ridgelines and elevations above 1200 feet and

areas adjacent to rivers and streams and within flood hazard areas. The Project site is not within either of these areas as depicted on the Future Land Use Plan within the Town Plan.

Additionally, the Rutland Regional Plan addresses land conservation from a broad perspective. The Future Land Use Plan for the region identifies "Development-Constrained Areas" which are described as having "significant limitations upon current or future development because of conservation easements, public ownership, or severe natural limitations. These include lands owned or overseen by the National Forest Service, the State of Vermont, or land trusts, as well as large tracts of land that are on slopes over 25% grade or are wetlands." This perspective on where land conservation measures should be focused is highly similar to the approach taken in the Middletown Springs Town Plan. The Project site does not fall into this land use designation.

While both the local and regional plans have identified broad areas and generalized statements on land conservation measures, neither specifically identifies the project site nor the area within which it located as part of a formalized conservation strategy or process. The form of the project, its scale and the potential continued use of remaining lands within the project parcel to retain agricultural function, all limit the impact the Project will have on the orderly development of the region. SE Group concludes the Project **will not create an undue adverse impact** on the orderly development of the region.

Middletown Springs Town Plan

Adopted March 6, 2012

Select Board:
Christopher Larson, Chair
Michael Lamson, Clerk
Shirley Moyer
Carl Haynes
James Webber

Planning Commission:
Meredith Morgan, Chair
Maureen McCormack, Secretary
Mark McManus
Vicki Arsenault
John Arsenault

<u>Statutory Authority and Requirements</u>
This Plan is being adopted following the procedures set forth in the Vermont Municipal and Regional Planning and Development Act
(Title 24, VSA, Chapter 117)

Table of Contents

	Page
Introduction	1
Chapter I: Town Background Information	
A. The Past, Present and Future	2
B. Surrounding Towns	5
C. Social Capital: The People Who Live Here	6
D. Economic Development	7
Chapter II: Land Use	
A. Overview	9
B. Rare and Irreplaceable Natural Areas and Resources	10
C. Agriculture	13
D. Village Area	15
E. Rural Areas	15
F. Highland Conservation Areas	16
G. Lowland Conservation Areas	16
H. Housing	18
I. Transportation and Access Management	19
J. Recreation	22
Chapter III: Town Facilities and Utilities	
A. Education	24
B. Library	26
C. Utilities	27
D. Solid Waste Disposal	28
E. Town Office	29
F. Emergency Services (Police, Fire and Medical)	29
G. Child Care	30
H. Emergency Management	31
I. Telecommunications Facilities	32
J. Energy	33
Chapter IV: Implementation Program	36
Appendix A: Summary of Town Plan Survey	
Appendix B: Maps	

D. Village Area:

The village area is an area of compact development in the center of the Town. It is not a governmental entity with defined boundaries but an undefined area extending in all four directions from the intersection of Routes 133 and 140 until open fields are encountered (See "*Utilities and Facilities*" map for a rough boundary of the village area). It includes virtually all community-wide facilities including the Town Office, the Volunteer Fire Department, the Town Library, the Middletown Springs Elementary School, the U.S. Post Office, two churches, small retail establishments, the Mineral Springs Park with a re-creation of the 19th century spring house and a picnic area and, in the heart of the village, the solid waste transfer station and storage facilities for sand, road salt, and road maintenance equipment. Continued effort should be made to resolve the issue of the location of the recycling/transfer station and to improve the appearance of the village center.
(See "*Town Background Information"* in Chapter I above for further description of the village area.)

Goal: Maintain a traditional, compact village consisting of residences and appropriate services and businesses.

Strategies:

1. Continue the ongoing search for available land to relocate the solid-waste transfer station and road maintenance facilities to an area that is convenient for the people of the town but not necessarily in the heart of the village. If such a location is found, bring the issue of moving the facility before the Town's voters. (See section on "*Solid Waste Disposal*" under "*Town Facilities and Utilities*" below.)
2. Allow the development of compact growth within the village to the extent that such development provides for adequate and safe water supplies and waste disposal. (See "*Utilities*" below.)
3. Consider seeking Village Center Designation through the Vermont Downtown Program of the Department of Housing and Community Affairs.

E. Rural Areas:

The rural area is defined as the lands around the village, extending to slopes too steep for agriculture. (See "*Future Land Use"* map) It includes all farmland, residential lots outside the village, and forestland. Many older properties are listed in the Vermont State Registry of Historic Places. Agricultural uses include but are not limited to dairy, beef, horses, small ruminants, crops, maple syrup, fruit, and logging.

Goal: Maintain attractive countryside with large tracts of open land in diversified agricultural uses.

Strategies:

1. Support current-use taxation of agricultural land.
2. Support Right-to-Farm legislation.
3. Foster awareness of private or foundation funding to purchase conservation easements and development rights of prime agricultural and scenic lands.

F. Highland Conservation Areas

Middletown Springs is defined by the steep, forested ridgelines that occur near the boundary of the town including Coy Mountain, Spruce Knob and Spoon Mountain, and the ridge above Train Brook. The ridgelines of Barker Mountain, Morgan Mountain, Barber Mountain, and Spaulding Hill, as well as a number of other unnamed ridges also contribute to the rugged topography of Middletown Springs. As the place names indicate, the ridgelines hold historic and sentimental value to residents. They are also important ecologically and aesthetically. With the exception of a small number of residences, the ridgelines and higher elevation areas are undeveloped. Because of their shallow soils and steep slopes, the ecosystems at higher elevations tend to be fragile and susceptible to damage. Many of these areas support a variety of less common natural communities such as forests dominated by oak, hickory, and pine, which have affinities to forests that occur further south. Many of the ridges that are accessible to logging equipment are periodically logged. While there are no existing local restrictions on development or use of these areas, it is important that citizens understand the fragile nature of these ecosystems and are aware of measures that will help maintain the distinctive natural communities.

See "*Rare and Irreplaceable Natural Areas and Resources"* above for Goals and Strategies.

G. Lowland Conservation Areas

The surface waters and wetlands found in Middletown Springs are associated primarily with the upper reaches of the Poultney River and its tributaries. The entire town with the exception with a small amount of land in the southwest and northeast corners falls within the upper Poultney River watershed. Surface waters and their associated riparian zones and wetlands provide a number of important functions and values including floodwater storage; surface and ground water quality protection; fish and wildlife habitat and travel corridors; opportunities for education, research, recreation and

to improve the quality of wireless service to all areas of the Town, consistent with the goals and policies of this Plan and residents' needs.
3. Plan for telecommunication services that are visually and environmentally unobtrusive including cellular services.

J. Energy

Introduction: Energy use in Middletown Springs parallels patterns throughout the region and the state. Transportation, heating, and lighting are the primary draws on fuel and electricity. Fuel costs, especially for home heating and transportation, are of prime importance to community members because of the cold winters and the town's rural settlement, both of which drive the demand for and reliance upon fuel for heat and automobile travel. In both of these areas Vermonters utilize substantially more than the national average. Nationally 22% of energy use is residential (heat and electricity) versus 30% in Vermont, and transportation consumes 27.5% nationally as opposed to 32% in Vermont.

The need is simple: reduced costs for and use of fuel. The solutions are more complex as cutting costs will entail conservation measures such as more fuel efficient vehicles, combining trips to save on fuel, better insulating homes, improved public transportation and pedestrian facilities, and land use planning that allows people to reach jobs, goods and services in shorter trips, perhaps even making walking or biking to those destinations safer and more feasible.

In considering energy use, consumers must keep in mind that energy used has been produced somewhere, and that impacts of generating supply for local use are felt in the generating communities. Sources that have the least environmental impact and which are renewable are most desirable, but can be more costly. Education is needed to help individuals and the town as a whole understand and evaluate the trade-offs and impacts of types of energy resources, to manage energy use, and to make informed choices.

Overview: The Town is located within the service territory of Central Vermont Public Service Corp., which provides electric service to the Town. CVPS power is generated from a mix of sources including substantial contracts for nuclear power from Seabrook, NH (no longer from VT Yankee), hydro power from Hydro Quebec and small local hydro-generators, small amounts of oil and gas, and a small but growing portion through solar, wind, biomass, and methane.

The two major energy uses in town are heating and transportation. In Middletown Springs about 63% of households are heated primarily with fuel oil or kerosene, 22% with wood, 13% with LP gas, and 1% with electricity. [Continue to look for updated info 2010 census.] Many households also use wood or wood pellets for supplementary or emergency heat.

A significant use of energy in Middletown Springs is for transportation. Annual per capita use in Vermont is 570 gallons of gasoline; the 6th highest in the country. Because of the town's rural setting and the general lack of commerce and local business, most residents must travel to get to work, secondary school, grocery stores, and services located outside the community. Four possible options to reduce energy consumption related to transportation in Middletown Springs include: 1) increased carpooling to work and Middletown Springs Elementary School, 2) the implementation of a bus system for Middletown Springs Elementary School students, 3) the construction of safe and aesthetic sidewalks and pathways connecting the housing in the village to the elementary school and to encourage more walking and biking to school and around town 4) the purchase of more fuel-efficient vehicles by the Town and residents .

The most likely catalyst for expanding carpooling is the increase in social media use. Digital community bulletin boards, such as Front Porch Forum, Facebook, and similar sites allow drivers and riders to connect more easily than ever before.

Grant funding may be available for a feasibility study or even a pilot test of a school bus system for a year to evaluate the energy savings and to gauge public support for continuing a bus system.

Biking and walking remain popular in the Town, and grant funding through the Department of Transportation, Safe Routes To School, and similar programs may fund the infrastructure to enhance safe and easy movement.

Progress: Because education about energy efficiency as well as alternative energy sources is a significant community focus, the Middletown Springs Energy Committee was formed in 2011 to promote energy awareness and efficiency in the town. The committee has been actively advocating and assisting the Neighborworks H.E.A.T. Squad program. The Middletown Springs Public Library has undertaken extensive energy efficiency upgrades. On their own, several individuals in town have installed either photovoltaic and thermal solar systems, at least seven of each, to harness renewable energy. In addition, several homes in the community are models of energy efficiency earning Energy Star ratings, and at least one home is LEEDS certified. More and more residents are buying hybrid and other fuel-efficient vehicles.

Middletown Springs community members form the core planning and implementing team of SolarFest (www.solarfest.org), one of the largest festivals in the U.S. devoted to renewable energy education. The energy education festival is held each July in Tinmouth. Many Middletown Springs community members either volunteer at or attend the three day festival each year. The event features energy education workshops, renewable energy vendors and demonstrations, and solar powered entertainment.

Goal: Enable wise choices for residents, businesses and public buildings and for transportation regarding reliable, affordable, and sustainable energy use and conservation.

Strategies:

1. Promote conservation of energy through community initiatives (e.g.: carpooling, recycling, and energy efficiency improvements in homes, school, and community buildings).
2. Provide practical information about available alternative energy technologies.
3. Continue strong community support for SolarFest, an important annual energy education event.
4. Promote biking and walking through the construction of safe and aesthetic sidewalks and bike paths in the village, ensuring connection to the Middletown Springs Elementary School.
5. Conserve energy in buildings used by the Town and school.
6. Develop and promote a program for car-pool awareness and education.
7. Pursue energy efficiency programs that can benefit residents and the Town.
8. Pursue grant funded opportunities to improve the energy efficiency of public buildings
9. Participate in regional planning efforts and programs to provide bus service to Middletown Springs.
10. Pursue funding for bike and walking paths through the "Safe Routes to School" program and other grant sources.

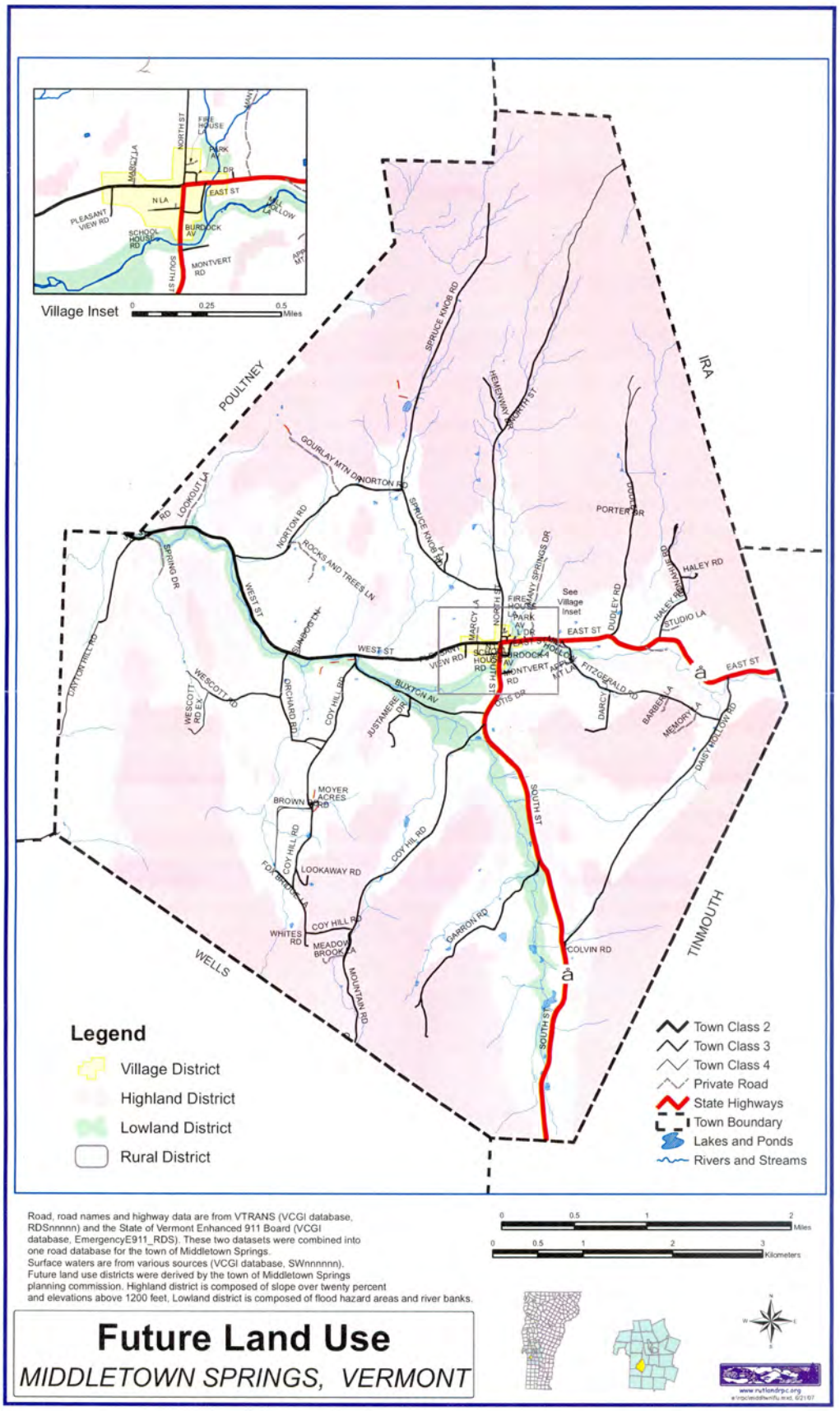
Village Inset
POULTNEY
IRA
WELLS
TINMOUTH
Legend
Village District
Highland District
Lowland District
Rural District
Town Class 2
Town Class 3
Town Class 4
Private Road
State Highways
Town Boundary
Lakes and Ponds
Rivers and Streams
Road, road names and highway data are from VTRANS (VCGI database, RDSnnnnn) and the State of Vermont Enhanced 911 Board (VCGI database, EmergencyE911_RDS). These two datasets were combined into one road database for the town of Middletown Springs.
Surface waters are from various sources (VCGI database, SWnnnnnnn).
Future land use districts were derived by the town of Middletown Springs planning commission. Highland district is composed of slope over twenty percent and elevations above 1200 feet, Lowland district is composed of flood hazard areas and river banks.
Miles
Kilometers
Future Land Use
MIDDLETOWN SPRINGS, VERMONT

Rutland Regional Plan

Adopted by the Rutland Regional Planning Commission

Table of Contents

Regional Plan

	Page Number
Chapter 1: Introduction	5
Chapter 2: Regional Profile	13
Chapter 3: Future Use of Land	25
Chapter 4: Housing	31
Chapter 5: Economic Activity	45
Chapter 6: Historical and Cultural Resources	57
Chapter 7: Health and Wellness	63
Chapter 8: Community Involvement	77
Chapter 9: Public Libraries	85
Chapter 10: Education	91
Chapter 11: Child Care	99
Chapter 12: Recreation	105
Chapter 13: Agriculture and Forestry	117
Chapter 14: Wildlife and Natural Habitats	127
Chapter 15: Water Quality	139
Chapter 16: Energy	151
Chapter 17: Emergency Management	169
Chapter 18: Flood Resiliency	177
Chapter 19: Telecommunications	193
Chapter 20: Resource Extraction	199
Chapter 21: Water and Wastewater Systems	203
Chapter 22: Solid Waste and Recycling	211

Regional Transportation Plan

Chapter 23: Introduction	217
Chapter 24: Roads and Bridges	219
Chapter 25: Public Transportation	229
Chapter 26: Bicycles and Pedestrians	235
Chapter 27: Rail	243
Chapter 28: Air Services	251
Chapter 29: Corridor Planning	259
Chapter 30: Multi-Modal Issues	265

Chapter 3: Future Use of Land

INTRODUCTION

This section is the culmination of the entire *Rutland Regional Plan*. Obstacles and solutions identified in each of the previous sections are brought together to create a broad image of a sustainable future for the Region. It is hoped that users of this *Plan* apply the ideas towards cohesive future land development.

CURRENT CONDITIONS

The Rutland Region's settlement patterns are diverse. Rutland City is the prime urban area, centrally located in the Region, nestled in a valley between tight mountain ranges. It is bordered by several communities that contain both urban and rural elements. Elsewhere in the Region – 10-20 miles outside of the urban area, are a series of five sub-regional centers.

Outside of these centers, and in several other communities in the Region, smaller villages and hamlets are present thanks in large part to historic settlement patterns. Working rural landscapes, large tracts of open or forested land, and National Forest Land dominate the remainder of the Region.

Over the past 50 years, land use has changed dramatically. Land that was once in pasture and agriculture has grown into forests, while traditional compact settlement patterns, and distinctions between rural and village areas have become less clear as development has spread outwards.

FUTURE TRENDS

The slow transformation of the landscape will likely continue. Uses of agricultural lands will evolve to meet changing demands. Development of land will continue to take place, though, according to population forecasts, not at a rapid pace.

Current trends that are likely to continue into the future include:

- Commercial uses are becoming larger and creating impacts. "Big box" stores have entered the local retail market over the past decade and affected the way in which people shop and travel to shop. They generate significant traffic flows, require large parking areas, and make a greater visual impact than their predecessors. Stormwater run-off has also become a concern.
- Residential development is spreading outward, with the majority of new

DEFINITIONS

Future Use of Land – the patterns by which development of land is projected to take place in a given area .

SCOTT'S MAP OF RUTLAND COUNTY, 1854

Scott's Map of Rutland County, prepared by J. Chase, Jr., 1854

DEFINITIONS

DENSITY: The range, scale magnitude or concentration of activity affecting the land use, impacting traffic flow, commercialism, and overall land use.

CONNECTING THE PLAN

The Future Land Use Chapter is the culmination of the entire Regional Plan. For background, look at the regional Profile.

homes being built on rural sites outside of traditional village or hamlet areas.

- Suburban type development, with less vernacular architecture, is also becoming more prevalent. Prime agricultural land is being subdivided and used for residential purposes.

Some towns have also been instrumental in promoting new development and redevelopment within their center, through private initiatives and public incentives, like grant programs such as the village/town designation, transportation enhancement grants, and municipal planning grants.

At the heart of the land use issue is a concern that development patterns in the form of low density, auto-dependent, discontinuous strip development is eroding the character of the area.

It is expected, based on current development practices in the Rutland Region and across the country, that this trend will continue.

MEETING CURRENT AND FUTURE NEEDS

The challenges presented by current development are complex.

There is a link between land use and towns' regulatory and nonregulatory controls. The quality of these regulations and plans, consistency with the adjacent towns' plans and that of the *Regional Plan* provide the framework for future land use.

Broad goals and specific actions presented throughout the *Regional Plan* provide the Regional Planning Commission and all users of this document with tools to address the issues highlighted above from a variety of perspectives.

The goals for future land use are the

National Agricultural Imagery Program, 2003, printed from the RRPC's GIS system

This aerial photograph of Fair Haven's village illustrates a compact village surrounded by working farm and forestland

foundation of the Region's planning and development program. They are intended to be applied throughout the Region along with the *Plan's* goals for housing, economic development—in several forms, transportation, public facilities, natural and cultural resources, and energy, among others .

FUTURE USE OF LAND GOALS

The following broad goals for the future use of land in the Rutland Region are presented with the intent that they be read and considered together, as whole, and not as a series of individual statements:

- To maintain and improve the accessibility, livability and viability of existing built-up areas.
- To protect the character of rural areas and resource areas by discouraging scattered development and incompatible land uses.
- To promote competitive and sustainable agricultural, forestry, mineral extraction, and other practices that make use of the Region's natural resources.
- To encourage and facilitate development in existing and future growth centers appropriate to the scale of the centers.
- To promote intensive land uses and development only in areas where adequate public services, facilities, and employment centers are available.
- To protect the natural environment and its economic, ecological, sociological, psychological and aesthetic benefits.

RUTLAND RPC ACTIONS

In addition to supporting activities and developments that contribute to individual communities and the Region, and which help meet the needs identified in this Plan, the Rutland Regional Planning Commission shall:

- Work with communities to develop municipal plans and regulations that promote compact development, mixed use villages and town centers, and productive working landscapes.
- Work with towns to implement their plans through regulatory and non-regulatory controls
- Provide towns with GIS data so when development proposals are presented, towns have the most up-to-date information to make informed decisions.
- Work with communities to retain vibrant village centers.
- Work with interested communities to successfully tie commercial and industrial uses into existing land use patterns.
- Provide ongoing education to local officials and boards on best practices for the review of development proposals.
- Participate in Act 250/Section 248

FOOD FOR THOUGHT

"Density is an emotional thing masquerading as a scientific ratio.

"We always hear from people that they want a cafe, a bakery, and a bookstore. But all these businesses depend on a certain amount of street traffic. They're a function of density.... you need a certain amount of density at a certain household income within a certain radius to support a grocery store."

— architect Alex Seidel

FAST FACT

Between 1997 and 2002, the Rutland Region lost 7,-000 acres of agricultural land (roughly half the size of Sudbury or Wells) to development.

– *US Census of Agriculture*

RRPC Staff

Villages such as East Poultney are important features of the Region's landscape.

The Future Use of Land Map

The *Regional Plan's* Future Use of Land Map is a general guide for the forthcoming growth of the Region. It is based upon analyses from throughout the *Plan* and attempts to balance competing and complementary goals into a single image.

The map is intended to be conceptual; boundaries between area are imprecise. Specific sites and their prescribed uses are addressed locally.

The map is divided based on preferred densities of development intensity of activity. These include four generalized land use areas, a series of labels for the Region's town centers and villages. Together, these designations promote a cohesive pattern of growth and conservation that advances the intent of the *Rutland Regional Plan*.

Why the Labels and Land Use Areas Exist

The map is based on an analysis of the location, magnitude, and potential of multiple features that make different areas more or less suitable, with a goal of making efficient use of limited infrastructure and maintaining the unique qualities of the Region.

For example, business and industry rely on the presence of public water and sewer, close proximity of major transportation networks, and, in some cases, access to markets for selling their goods.

By the same token, due to physical site limitations (steep slopes and wetlands, among others) and relatively high costs incidental to land development in certain areas, much of the Region is not readily available for development. These areas are suited for less dense and intense development, in keeping with the Region's rural environment.

Additionally, deep, well drained soils, proximity to good roads, and access to markets as key elements of a successful agricultural future for the Region. The *Plan* is also intended to provide for the long-term sustainability of resources, open space and scenic lands.

Finally, the *Plan* seeks to promote housing and small business development within and adjacent to villages that is in keeping with their unique histories.

The attached map depicts both an efficient use of land and a shared vision for the future based on public input. It should be used as a guide for future development of the Region. Planned growth and development is directed to those areas most

Using the Map's Legend

High Density Development Areas

Areas shown as "high density" on the map are those most suitable for large-scale activity, within and in areas contiguous to the Region's downtowns, sub-regional centers, and industrial centers. They share a number of common features which make them attractive and suitable for these types of activities:

- Ease of access to major transportation routes
- Availability of utilities, including public water and sewer and high speed telecommunications
- Historic and current areas of concentrated population, business, and education
- Less critical natural resource and wildlife areas

These areas include the following designations within the Region:

Urban Center– The Region's economic, population, education, and service focus areas. Businesses and services in this area draw their employees and clients from throughout the Region. Many of the Region's largest employers are located in area, making use of the conglomeration of people and services.

Sub-Regional Centers-Areas where central public utilities for water and sewer are available and where there exists a central location or locations for commercial activities, schools, and civic activities for the town and surrounding towns.

Industrial / Business Parks – Areas designated by towns around

the Region and by the Rutland Economic Development Corporation as concentrated locations for business and industrial development. Parks have been designated in Clarendon, Brandon, Rutland City, Rutland Town, West Rutland, and Fair Haven.

RUTLAND STATE AIRPORT– The Region's principal airport offers commercial air travel and general aviation services. It is closely linked to adjacent industrial parks.

For the future:

Development in high density areas, including downtowns, sub-regional centers, and industrial / business parks should be concentrated to make efficient use of the Region's most concentrated infrastructure.

MEDIUM DENSITY DEVELOPMENT AREAS

Areas shown as "medium density" on the map include land in or adjacent to town centers, villages, and areas concentrated immediate around the Region's major lakes and ponds—Lake Bomoseen, Lake St. Catherine, Lake Hortonia, Chipman Lake, and Lake Sunrise. These areas serve a number of purposes and are likely to face the most change in the coming years. These areas are, as a general rule served by some but not all of the features common to "high density " areas.

These areas include the following designations within the Region:

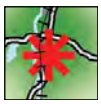

TOWN CENTERS– Areas where central public utilities for water and sewer are generally available and where there exists a central location or locations for commercial activities, schools, and cultural and civic activities for the town.

VILLAGE CENTERS– Areas that have developed into small community centers and normally consist of mixed land uses at medium densities. They also generally have consolidated groups of structures located on or near a major highway.

For the future:

Development in medium density areas should serve to reinforce neighborhood-scale town centers and villages and make efficient use of limited infrastructure and space. Where medium density activities already exist outside these centers, future growth and development should seek to create more efficient use of land and infrastructure.

LOW DENSITY DEVELOPMENT AREAS

Areas shown as "low density" on the map are Rutland County's working landscapes. They include areas with small, historic hamlets as well as actively farmed or logged terrain. Features they share:

- Limited public utilities
- Productive agricultural soils in lowlands
- Little concentration of population and business
- Greater critical natural resources

These areas include the following designations within the Region:

HAMLETS– Areas that contain small groupings of homes and locally supported stores and businesses. Generally, hamlets are not trade centers, nor do they contain community water supply or sewer systems.

For the future:

Agricultural and silvicultural activities should continue to dominate the Region's low density areas. Development in low density areas should be unobtrusive and maintain the rural character and scale of the locale.

DEVELOPMENT-CONSTRAINED AREAS

Areas shown as "development-constrained" have significant limitations upon current or future development because of conservation easements, public ownership, or severe natural limitations. These include lands owned or overseen by the National Forest Service, the State of Vermont, or land trusts, as well as large tracts of land that are on slopes over 25% grade or are wetlands.

For the future

Conservation of the natural landscape and careful management of lands is sought for these areas. Development should remain extremely limited.

recently seen dramatic growth in the amount of PV and which is now a serious and meaningful contributor to the state's electrical needs and an important part of Vermont's renewable energy industry.

One reason for the increase in the use of PV is that technology has been advancing, bringing the cost steadily downward, while at the same time increasing output. Examples include solar films and materials that can be applied to any outside surface (currently in use on light posts and power poles in Rutland City) and that use more of the light spectrum, including invisible portions such as infra-red. Recent advances in the storage of solar electricity are also promising.

Another big boost to solar are the government credits that have been available in recent years.

Although Vermont's total installed PV capacity is small compared to that of larger states, Vermont is already one of the top 10 states for PV production per capita (Environment America, 2014) and is the number one state in creating solar-related jobs. (Solar Foundation, 2014)

However, siting issues over solar generators have arisen in the Rutland Region because of the proliferation of solar, particularly 150 kW and greater utility-scale and commercial PV systems. There is concern that these systems in particular could be responsible for an undue loss of prime agricultural land, forests, wetlands and property values of neighbors. Questions over the regulatory process for solar generating facilities also arose with many municipalities feeling like they are lacking a voice.

Other challenges for solar generation include load shifting to distribute generation to peak periods of the day. As more solar generation comes online, peak load will likely be shifted so that it is distributed more evenly throughout the day.

Wind

Wind energy generation, like hydro and solar, is an energy source that is not depleted with use. In Vermont, about 1% of electric power comes from wind energy, all of it generated in-state at the Searsburg, Sheffield, Lowell Mountain and Georgia Mountain wind facilities, and at other small systems across the state (CEP, 2011).

However, to be cost effective, wind projects must be located on top of ridgelines. Unfortunately, ridgelines in the Rutland Region are visually prominent, host sensitive habitats for plants and wildlife, and are home to the headwaters of some of the Region's most pristine waters. (CEP, 2011).

Besides aesthetic concerns, there are health concerns with wind generation. Audible noise from turbines can be annoying and cause sleep deprivation. In addition, non-audible noise (infra-sound) is

FAST FACT

What is "microgrid" technology?

A microgrid is a small-scale power grid that can operate independently or in conjunction with the area's main electrical grid.

Any small-scale localized station with its own power resources, generation and loads and definable boundaries qualifies as a microgrid.

Microgrids can be intended as back-up power, to bolster the main power grid during periods of heavy demand, or disconnect from the main grid and operate independently, as Hardwick did during the 1965 blackout.

Often, microgrids involve multiple energy sources as a way of incorporating renewables. Other purposes include reducing costs and enhancing reliability.

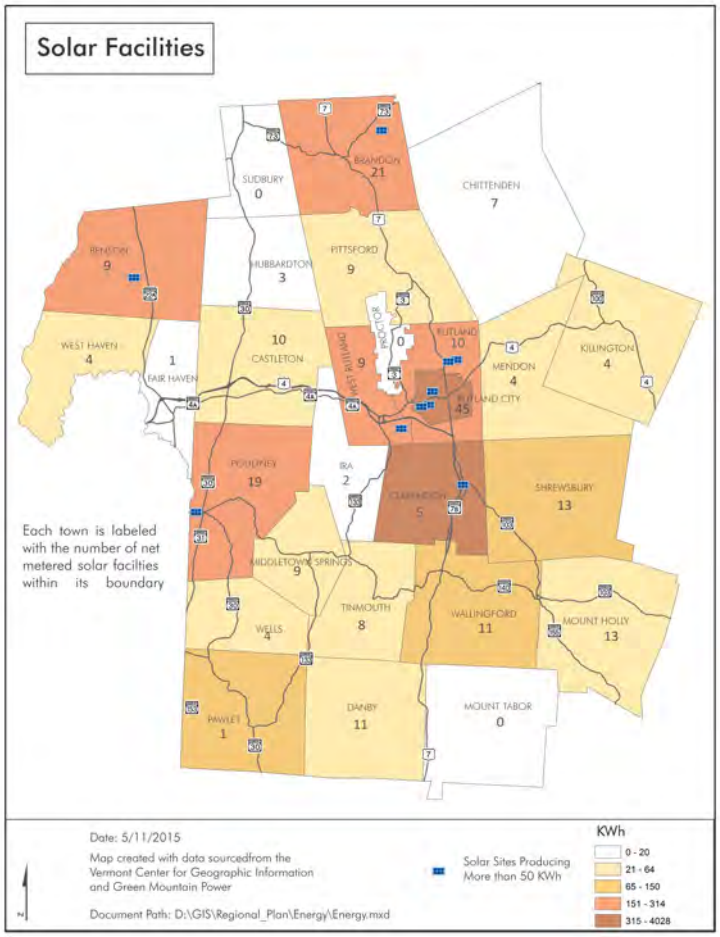

FOOD FOR THOUGHT

Municipalities are not statutory parties to PSB proceedings but will, for most projects, receive notice of pending applications (petitions).

A municipality can participate informally in energy facility development – e.g., by attending public hearings, raising concerns, providing written comments and recommendations, or by offering support or opposition for a project – or petition for formal party status as intervenors, with rights to appeal.

For more information and guidance, contact the Public Service Department or refer to the *PSB's "Citizens Guide to the Vermont Public Service Board's Section 248 Process"*: http://psb.vermont.gov/sites/psb/files/publications/Citizens%27%20Guide%20to%20248%20February%2014%202012.pdf

another health concern. Two proposed projects in the Rutland Region, in Pittsford and Ira, faced major opposition and were unable to get local support.

Wind generation projects are being built across the Northeast and in bordering provinces in Canada. Vermont utilities will be purchasing wind power from some of these resources into the future.

Bioenergy

Bioenergy options are steadily becoming more attractive in the Vermont energy market, although most are at different stages of market development.

Bioenergy includes:

- **Solid biomass** from woody plants and agricultural crops, such as corn, grass and hemp.
- **Liquid biofuels**, including biodiesel, ethanol, are being developed from oil seeds, waste vegetable oil, and algae.
- **Biogas,** such as methane from agricultural digesters, landfills, or wastewater treatment plants.
- **Bioheat** or heat capture from biomass, usually compost.

Certain types of bioenergy, such as wood, can be used for energy without significant processing. Wood pellets are used in schools in Walllingford and West Rutland. (Vermont Fuels for Schools Program). Nearly one-third of Vermont school children attend facilities that are heated by wood products, such as pellets or other biomass (EIA 2014).

One in six Vermont homes uses wood products as its primary heating source. (EIA 2014).

It is important that the sustainability relationship with bioenergy is addressed, so that the size of bioenergy projects match available resources and ones that are sustainable.

Elsewhere in the state, community-scaled thermal systems have been created. For example, Montpelier has created a heating district.

Small Scale Renewables

In the Rutland Region, there are a number of other small scale generation projects using renewable energy.

There is increasing interest in wood stoves and wood pellet furnaces for residential and small commercial applications, especially schools. Although less convenient than other fuel sources, both cord wood and wood pellets are lower in cost per energy unit than any other traditional fuel. Beyond wood, other common renewable energy systems include solar photovoltaic cells, solar water heaters, and small wind turbines (generally less than 100 feet tall). The falling cost of photovoltaic cells suggests more homeowners and businesses will choose to install solar systems to defray electrical costs and to be incorporated into new construction.

Geothermal heat pumps have gained favor as efficient renewable building systems. These are heating and cooling mechanisms driven by the consistent year-round temperature of the ground. The installation price of a geothermal system can be several times greater than that of a system with the same or similar heating and cooling capacity, but with modern heat pump technology, the additional costs pay for themselves over the life of the system.

Cold-climate heat pumps are being more widely used in the Rutland Region. These heat sources rely on electricity to heat homes rather than fuel oil and thus are expected to reduce heating costs and increase the demand for renewable energy generation.

Large Scale Renewables

Renewed interest in wood, wind, and solar also extends to energy companies and entire communities. Multiple large

projects have been proposed for the region, including a biomass facility to generate electricity and heat, multi-turbine wind projects to generate electricity, and solar projects to generate electricity. In Fair Haven the town has allocated funds to assess the feasibility of repowering two dams that impound the Castleton River but no longer generate power.

In addition, the towns of Wallingford and West Rutland have conducted feasibility studies to determine the potential to create district heating systems. District heating allows many buildings to use one large boiler that achieves higher efficiency than smaller units. When district heating pipes connect an entire downtown to gain economies of scale, wood becomes an ideal low-cost fuel. District systems are also large enough to allow cogeneration (also known as combined heat and power (CHP) to produce electricity and heat simultaneously.

Incentives for Local Energy Production

To assist small-scale and community renewable energy projects, Vermont has a Clean Energy Development Fund, created with tax payments from Vermont Yankee in return for allowing spent fuel to be stored on the premises.

Vermont is also the first state to institute a feed-in tariff for small renewable energy facilities, up to a maximum system capacity of 2.2 MW. The feed-in tariff, called the Standard Offer, part of the SPEED program, guarantees owners of small renewable facilities, like solar panels,

FAST FACT

Public utility power generators in the Rutland Region include: Patch Dam, Chittenden Dam, Proctor Dam, Carver Falls Dam, and a gas turbine in Rutland. Deer Flat Farms in Pawlet is the first in the county who signed on to CVPS's Cow Power in 2006.

Mount Holly school has a windmill on the property which produces 10% of the school's energy.

Towns throughout the state are attempting to re-establish old, retired dams. In Fair Haven, talks have progressed regarding the re-establishment of the Micro-Hydro Dam.

What Municipalities May Not, May and Shall Do in Regulating Energy Development

(24 V.S.A. Chapter 117)

Municipalities may not:

- Regulate through bylaws and ordinances public utility power plants and transmission facilities regulated by the Public Service Board, including net-metered facilities.
- Regulate the height of roof-mounted renewable energy structures, including wind turbines with blades less than 20 feet in diameter, or rooftop solar collectors less than 10 feet high, that are mounted on complying structures, unless the bylaws provide specific standards for their regulation.
- Adopt bylaws that prohibit or have the effect of prohibiting the installation of solar collectors, clotheslines, or other energy devices based on renewable energy resources.

Municipalities are required to:

- Consider undue adverse impacts of development on the use of renewable energy resources under conditional use review.
- Adopt statutory variance criteria that apply specifically to renewable energy facilities.

Municipalities may, under local land use regulations and the Municipal Plan:

- Provide clear written standard to preserve the aesthetics or scenic beauty of an area and identifies conservation needs, orderly development, and is based on "Quechee Analysis" legal precedent.
- Provide for and regulate off-grid and other systems not regulated by the Public Service Board.
- Grant waivers to reduce dimensional requirements for energy conservation and renewable energy structures.
- Adopt regulations and standards of review that encourage energy conservation and more energy efficient development.
- Provide for and protect access to renewable energy resources (e.g., under site plan and subdivision review).
- Allow for planned unit development (PUD) to promote (or require) more energy-efficient forms of development, and the incorporation of renewable energy facilities.
- Provide "green development incentives" including regulatory incentives that encourage the use of low-embodied energy in construction materials, and planned developments that allow for reduced use of fuel for transportation, and increased use of renewable technologies. Incentives may include increased densities of development and expedited review.

Proposed Regional and Community Standards for Energy Facility Siting & Development

(for Regional and Municipal Plans and Act 250/ Section 248 Proceedings)

To carry the most authority in a PSB proceeding, a municipal or regional plan must be clear, specific, and consistent in expressing community standards. A plan must be unambiguous on stating a community's position on the development of energy facilities. A collaborative approach shall be used to ensure there is a thoughtful planning process that includes input from the region and the municipality and encourages developers to involve regional and municipal officials as early as possible.

The following sections lay out specific standards for particular types of energy transmission and generation facilities. Where a new generation facility requires a new transmission facility, including electrical substations, both the generation and transmission standards shall apply. The standards below are not the exclusive standards and are intended to apply along with policies elsewhere in the *Rutland Regional Plan*.

All Transmission and Generation Facilities

1. The Rutland Regional Plan requires facilities to conform to all policies stated throughout the Plan.
2. All facilities shall conform to local, state and federal regulations.
3. Every facility above 10 kW shall specify an action plan and guaranteed funding source for decommissioning to ensure the site is safe, stable, and free of structures and hazardous materials.
4. Road access to the facility shall not contribute to unsafe conditions for the general public.
5. Light pollution is minimized to every extent possible. Non-critical outdoor lighting is activated by motion-sensors or on-site personnel. Light fixtures are shielded down to minimize light trespass and upward glare or glow.
6. Every facility, with the exception of wind turbines, shall be designed and constructed to meet the audible noise regulation of the municipality; if the municipality has no noise standard, the facility shall not exceed daytime levels of 45 dBA Lmax and nighttime levels of 30 dBA Lmax, as measured at the property line.
7. No facility shall create conditions that reduce or interfere with television, radio, radar, or other communication signals, including public safety communication systems.
8. Every facility of 200 kW or greater generation capacity, and every transmission substation facility, shall prominently display 24-hour emergency contact information and file site plans and emergency response plans with the fire departments serving the location.
9. Facility construction and renovation is consistent with historic preservation guidelines published by the Secretary of the Interior and the Vermont Division for Historic Preservation.
10. Any proposed facility shall comply with the plan and bylaws of the municipality where it is to be located.
11. Any proposed facility shall consider the cumulative impact of land use aesthetics, property values, and landowner compensation for multiple energy generation and transmission facilities.

Hydropower Facilities

Hydropower facilities used to generate electricity shall be designed, constructed, and operated such that:

1. The facility makes use of an existing impoundment or watercourse structure to generate electricity without changing the water quality, water temperature, upstream and downstream habitat of the facility. Vermont Agency of Natural Resources regulations for stream flow shall apply. The *Plan* recognizes the viability and importance of utilizing existing dams, including upgrading outdated equipment to maximize generation.
2. The facility does not increase flood hazard to public or private structures or public infrastructure.
3. The facility does not impair or inconvenience recreational users. Any portage is well marked, as short as possible, and features stable shoreline areas for landing and launching.

Solar Electricity Facilities

Photovoltaic and other solar electricity facilities shall be designed, constructed, and operated such that:

1. The facility is located to make use of a developed or existing structure or brownfield site, including parcels contaminated or perceived to be contaminated that otherwise hinders redevelopment, so as to avoid primary agricultural soils and silvicultural areas.
2. The facility is designed to locate inverters and support structures away from existing residences, wetlands, special flood areas, and slopes.

Biomass Facilities

Facilities that burn woody biomass to generate electricity shall be designed, constructed, and operated such that:

1. Biomass inputs (fuel) are sourced in accordance with a written procurement standard approved by the Vermont Agency of Natural Resources. If a standard is not available, a majority of fuel shall be sourced from lands managed under the Use Value Assessment program; or from harvests monitored by a professional forester.
2. The facility is designed and operated to utilize waste heat for an integral purpose, such as district heating of multiple buildings; manufacturing or processing; or agricultural production.
3. The facility shall be designed to avoid traffic through residential areas, provide safe access onto local or state highways, and not contribute to unreasonable congestion on area highways.
4. The facility shall use the least amount possible of water withdrawal and discharge by using latest technology, such as dry cooling.
5. The water that is discharged by the facility shall not increase the nutrient load on waterbodies in the area.
6. The use of wood waste shall be encouraged provided it does not contain toxic materials.

Wind Facilities

Facilities that generate electricity using the force of wind and designed with generation capacity of 100 kW or greater shall be designed, constructed, and operated such that:

1. Facility components, including towers, shall be located to minimize component visibility from beyond project boundaries.
2. The distance from a tower base to the nearest property line shall be at least 1.5 times the total height of the turbine structure as measured from mean ground level at the base to the top of its highest blade.
3. Any tower base shall be set back at least one mile per megawatt from any habitable structure (at the time of petition) that is not related to the facility. The owner of a structure within this setback distance may waive requirements for their property in writing.
4. Since wind turbines have a unique sound profile that is more annoying at lower decibel levels, facilities shall not exceed 35 dBA Lmax daytime/ 30 dBA Lmax nighttime measured from the property line.

Electrical Transmission Facilities

Electrical transmission facilities in excess of 30 kV and related substations shall be designed, constructed, and operated such that:

1. Existing rights-of-way shall be used by new facilities. The need for a new facility beyond these corridors shall be based on the Public Service Board's review of system need, reliability, and economic benefit.
2. Any transmission line, substation or other structure is located away from special flood hazard areas and wetlands.
3. Any upgrade to 3-Phase requires a permit. From the Public Service Board.
4. When electrical transmission lines are less than 50 feet from residences, they shall be re-routed or buried.

Natural Gas Transmission Facilities

Fixed natural gas transmission facilities shall be designed, constructed, and operated such that:

1. New or expanded facilities shall use existing utility or transportation rights-of-way.
2. New or expanded facilities shall serve existing development within 2.0 miles of the transmission route—including all downtowns and village centers as designated by the Agency of Commerce and Community Development.
3. Any gate station, compressor facility, or other above-ground structure shall comply with the plan and bylaws of the municipality.
4. Any transmission trunk line (including the pipeline) shall be set back at least 150 feet from any habitable structure (at the time of petition) that is not related to the facility. The owner of the structure within this setback distance may waive requirements for their property in writing.

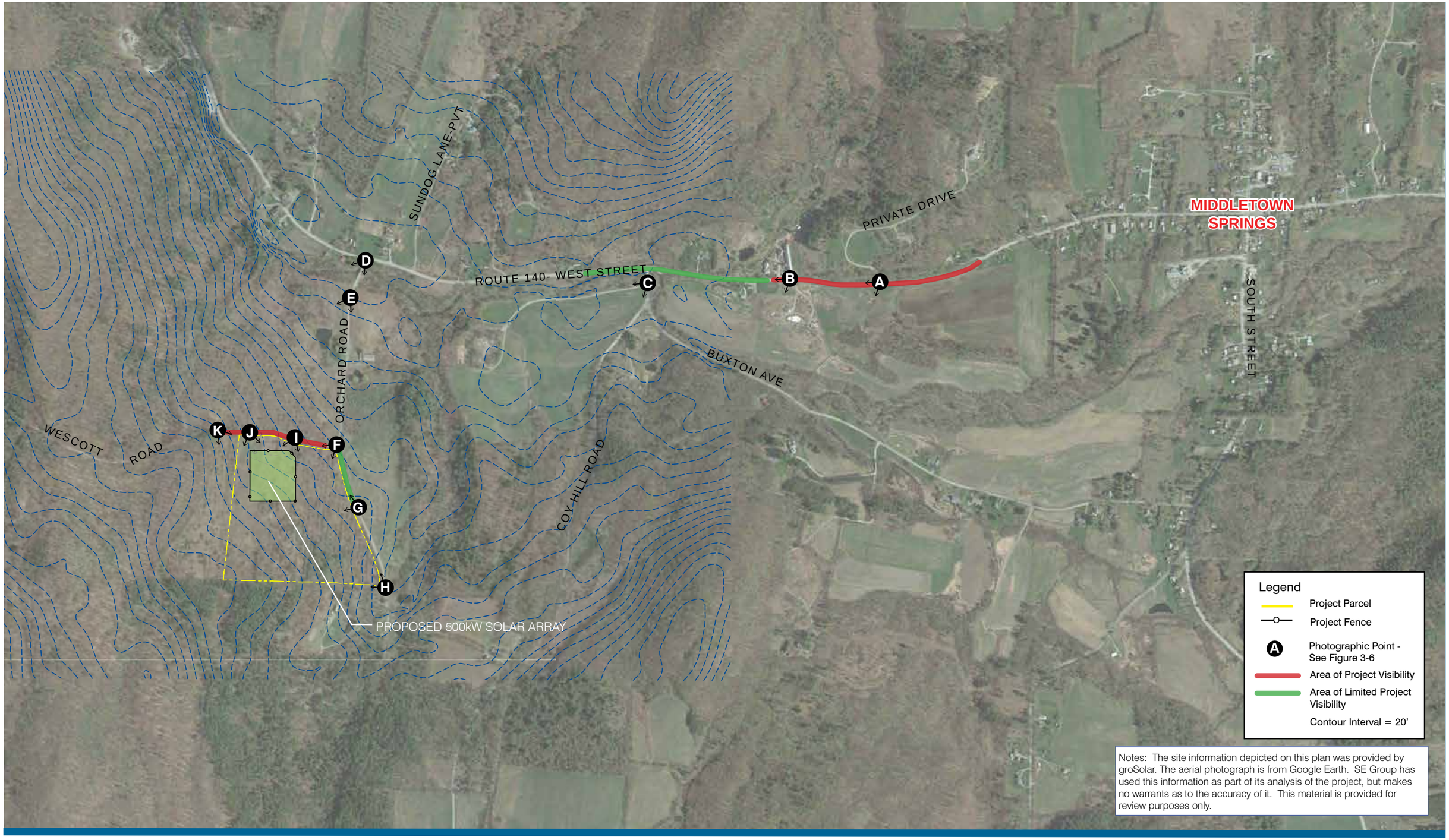

Notes: The site information depicted on this plan was provided by groSolar. The aerial photograph is from Google Earth. SE Group has used this information as part of its analysis of the project, but makes no warrants as to the accuracy of it. This material is provided for review purposes only.

Prepared By:

SE GROUP

SCALE (ft)

0 800 1600

groSolar | Orchard Road Solar - Middletown Springs , VT

CONTEXT/VIEWSHED PLAN | Figure 1

July 1, 2016

Prepared By:

SE GROUP

SCALE (ft)

0 200 400

groSolar | Orchard Road Solar - Middletown Springs , VT

SITE PLAN | Figure 2

July 1, 2016

A - VIEW LOOKING SOUTHWEST FROM #124 WEST STREET/ROUTE 140 DRIVEWAY TOWARDS PROJECT SITE

A1 - PANORAMIC VIEW LOOKING SOUTHWEST FROM #124 WEST STREET/ROUTE 140 DRIVEWAY TOWARDS PROJECT

B - VIEW LOOKING SOUTHWEST FROM BARN ON WEST STREET/ ROUTE 140 TOWARDS PROJECT SITE

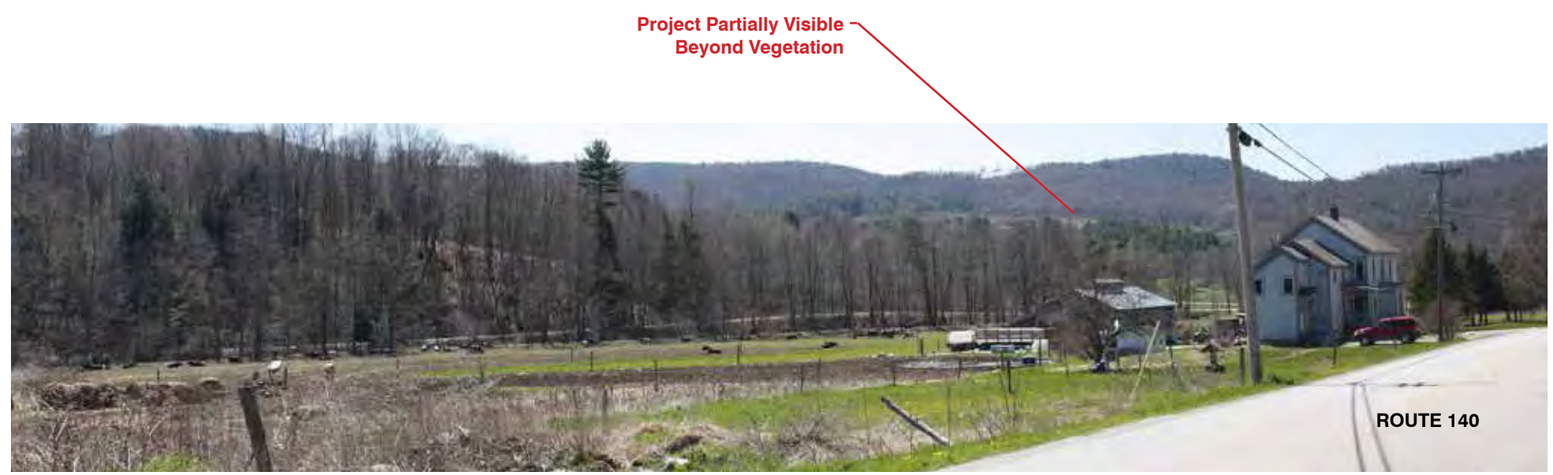

B1 - PANORAMIC VIEW LOOKING SOUTHWEST FROM BARN ON WEST STREET/ROUTE 140 TOWARDS PROJECT SITE

All Photographs taken by SE Group using a Canon Rebel camera with a 52mm focal length (35 mm equivalent) on 04/29/2016 from 1:00 PM-2:00 PM Panoramic views are for contextual purposes only.

Prepared By:

SE GROUP

groSolar | Orchard Road Solar - Middletown Springs , VT

SITE PHOTOGRAPHS | Figure 3

July 1, 2016

C - VIEW LOOKING SOUTHWEST FROM BUXTON AVE TOWARDS PROJECT SITE

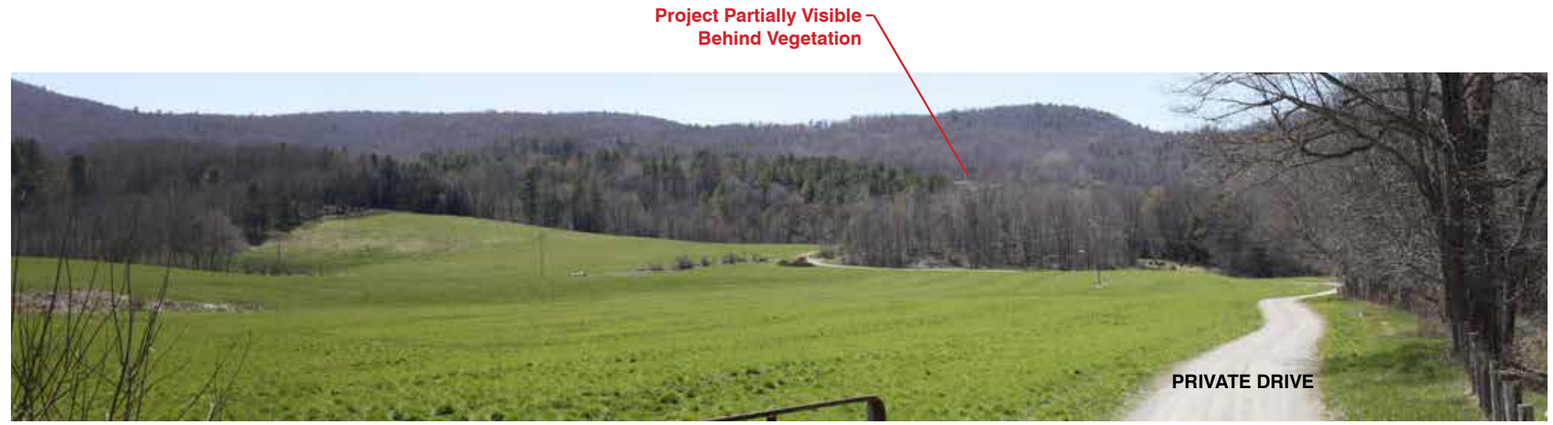

C1 - PANORAMIC VIEW LOOKING SOUTHWEST FROM BUXTON AVE TOWARDS PROJECT SITE

D - VIEW LOOKING SOUTH FROM THE INTERSECTION OF ORCHARD ROAD AND WEST STREET/ROUTE 140 TOWARDS PROJECT SITE

D1 - PANORAMIC VIEW LOOKING SOUTH FROM THE INTERSECTION OF ORCHARD ROAD AND WEST STREET/ROUTE 140 TOWARDS PROJECT SITE

All Photographs taken by SE Group using a Canon Rebel camera with a 52mm focal length (35 mm equivalent) on 04/29/2016 from 1:00 PM-2:00 PM Panoramic views are for contextual purposes only.

E - VIEW LOOKING SOUTH FROM ORCHARD RD TOWARDS PROJECT SITE

E1 - PANORAMIC VIEW LOOKING SOUTH FROM ORCHARD RD TOWARDS PROJECT SITE

F - VIEW LOOKING SOUTHWEST FROM THE CORNER OF ORCHARD ROAD AND WESCOTT ROAD TOWARDS PROJECT SITE

F1 - PANORAMIC VIEW LOOKING SOUTHWEST FROM THE CORNER OF ORCHARD RD AND WESCOTT RD TOWARDS PROJECT SITE

All Photographs taken by SE Group using a Canon Rebel camera with a 52mm focal length (35 mm equivalent) on 04/29/2016 from 1:00 PM-2:00 PM Panoramic views are for contextual purposes only.

G - VIEW LOOKING WEST FROM ORCHARD RD TOWARDS PROJECT SITE

G1 - PANORAMIC VIEW LOOKING WEST FROM ORCHARD RD TOWARDS PROJECT SITE

H - VIEW LOOKING NORTH FROM ORCHARD RD TOWARDS PROJECT SITE

H1 - PANORAMIC VIEW LOOKING NORTH FROM ORCHARD RD TOWARDS PROJECT SITE

All Photographs taken by SE Group using a Canon Rebel camera with a 52mm focal length (35 mm equivalent) on 04/29/2016 from 1:00 PM-2:00 PM Panoramic views are for contextual purposes only.

I - VIEW LOOKING SOUTH FROM WESCOTT ROAD TOWARDS PROJECT SITE

I1 - PANORAMIC VIEW LOOKING SOUTH FROM WESCOTT ROAD TOWARDS PROJECT SITE

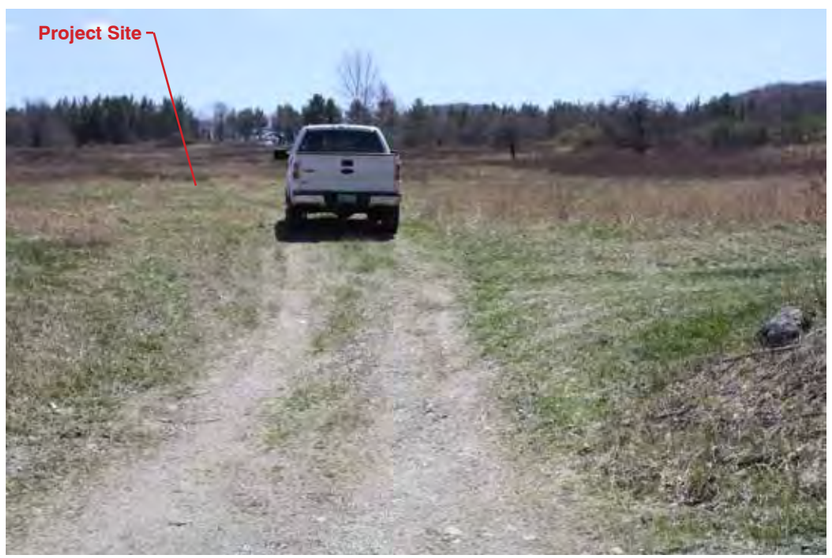

J - VIEW LOOKING SOUTH FROM WESCOTT ROAD AT PROJECT ENTRANCE TOWARDS PROJECT SITE

J1 - PANORAMIC VIEW LOOKING SOUTH FROM WESCOTT ROAD AT PROJECT ENTRANCE TOWARDS PROJECT SITE

All Photographs taken by SE Group using a Canon Rebel camera with a 52mm focal length (35 mm equivalent) on 04/29/2016 from 1:00 PM-2:00 PM Panoramic views are for contextual purposes only.

K - VIEW LOOKING SOUTHEAST FAROM WESCOTT ROAD AT WOODLINE TOWARDS PROJECT SITE

K1 - PANORAMIC VIEW LOOKING SOUTHEAST FROM WESCOTT ROAD AT WOODLINE TOWARDS PROJECT SITE

All Photographs taken by SE Group using a Canon Rebel camera with a 52mm focal length (35 mm equivalent) on 04/29/2016 from 1:00 PM-2:00 PM Panoramic views are for contextual purposes only.

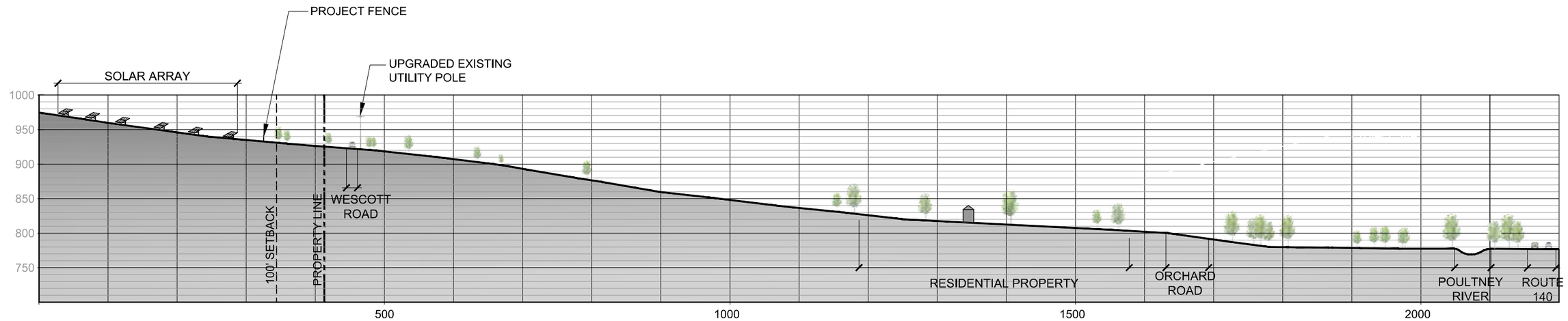

CROSS-SECTION A

Prepared By:

SE GROUP

SCALE (ft)

0 150 300

groSolar | Orchard Road Solar - Middletown Springs , VT

SITE SECTION- A | Figure 9

July 1, 2016

PLANT LIST:

KEY	BOTANICAL NAME	COMMON NAME	QTY.	SIZE	REMARKS
TREES:					
AC	Amelanchier canadensis	Shadblow Serviceberry	11	6-7' Ht.	B&B, Multi-Stem
AS	Acer saccharum 'Green Mountain'	Green Mountain Sugar Maple	7	2-2.5" Cal.	B&B, 6' min. branching
PS	Pinus strobus	Eastern White Pine	29	8-10' ht.	B&B, Full

Notes: The site information depicted on this plan was provided by Novus Energy. The aerial photograph is from Google Earth. SE Group has used this information as part of its analysis of the project, but makes no warrants as to the accuracy of it. This material is provided for review purposes only.

Prepared By:

SE GROUP

SCALE (ft)

0 80 160

groSolar | Orchard Road Solar - Middletown Springs , VT

MITIGATION PLANTING PLAN | Figure 10

July 1, 2016

STATE OF VERMONT
PUBLIC SERVICE BOARD

Application of Orchard Road Solar I, LLC for a certificate of public good, pursuant to 30 V.S.A. §§ 219a and 248, to install and operate a 500 kW group net metered solar electric generation facility located on Orchard Road in Middletown Springs, Vermont, to be known as the "Orchard Road Solar Project"	)	CPG #NMP ____

Affidavit of Mark Kane

1. My name is Mark Kane. I am a land use planner and the Director of Community Planning and Design at SE Group, which is a multi-disciplinary consulting firm specializing in the planning, entitlement and design of public facilities, mountain and resort communities and other complex projects. SE Group has four offices across the United States, and the Vermont office is located at 131 Church Street, Burlington, Vermont 05401.
2. I received my Bachelor of Science in Environmental Studies from the University of Vermont's School of Natural Resources in 1991. After graduating, I worked as an environmental scientist at Wagner, Heindel, & Noyes, in Burlington, Vermont. Beginning in 1996, I worked as a land planner and principal of Dunn Hamelin Kane, also located in Burlington. I have been working at SE Group for 14 years and have been a director of that group since 2005. My resume is provided as ***Exhibit ORS-MK-1.***
3. I have worked on and/or managed dozens of aesthetic and land use analyses for renewable energy projects, including Kingdom Community Wind Farm in Lowell, Vermont, New Haven Solar Farm in New Haven, Vermont, and the Addison Solar Farm, in Ferrisburgh, Vermont. In addition, I have extensive experience with Aesthetic and Environmental Impact Analysis, Regional and Land Use Planning, Permitting and Entitlement, and Geographic Information Systems ("GIS"). I am an affiliate member of the American Society of Landscape Architects, a

member and executive council member of the Vermont Planners Association, and the Vermont Director for the Northern New England Chapter of the American Planning Association.

4. In my position at SE Group, I regularly supervise employees and rely on work that is completed by my properly trained employees, under my direction, to gather the facts needed for me to form opinions and evaluate the potential impacts of proposed development projects.
5. SE Group was retained by groSolar to conduct certain pre-development work related to groSolar's proposed Orchard Road Solar Project.
6. On April 29, 2016, under my direction, several SE Group employees visited the Orchard Road Solar Project site and surrounding areas in Middletown Springs, Vermont in order to inventory the visual resources in the area, the proposed Project's viewshed, and to take photographs of the Project site and the area.
7. Based on these field visits and under my direction, SE Group employees prepared graphics (map products, cross-sections, etc.) to document the location of these photographs, the position of the Project with respect to its surroundings, the shape of the underlying terrain and vegetated condition.
8. I also reviewed the current Town and Regional Plans for the Town of Middletown Springs and Rutland Regional Planning Commission to determine whether the proposed Project would conform to those plans.
9. Relying on the above work products, I was able to review the Project under the Quechee Test. Based on this review I recommended and the Petitioner has agreed to a number of landscape mitigation steps that, while not required because of a determination that the Project had an adverse impact, would materially help improve the visual compatibility of the Project with

respect to those in closest proximity. These measures have been documented on a mitigation plan that I directed the preparation of.

10. My findings and conclusions regarding aesthetics (§ 248(b)(5)) and orderly development of the region (§ 248(b)(1)) are documented in a report, with several figures, that I wrote and directed the preparation of. The report is submitted in this proceeding as ***Exhibit ORS-MK-2.***

I, Mark Kane, do hereby swear and affirm under the penalty of law that the information provided in my affidavit is accurate to the best of my knowledge and that I have personal knowledge of, and am able to testify as to the validity of the information contained in my testimony and attached exhibits.

Mark D. Kane

State of Vermont
County of Chittenden

The foregoing instrument was signed and acknowledged before me this 15 day of July, 2016 at Burlington, Vermont by Mark Kane who acknowledged the act to be his free act and deed.

Notary Public
Name of Notary: Grace Grindhauser
Commission Expires: 2-10-19

STATE OF VERMONT
PUBLIC SERVICE BOARD

Application of Orchard Road Solar I, LLC for a certificate of public good, pursuant to 30 V.S.A. §§ 219a and 248, to install and operate a 500 kW group net metered solar electric generation facility located on Orchard Road in Middletown Springs, Vermont, to be known as the "Orchard Road Solar Project"	)	CPG #NMP ____

PREFILED DIRECT TESTIMONY OF ROD VIENS

July 15, 2016

Summary: Mr. Viens' testimony describes the Orchard Road Solar Project (the "Project") and schedule, and specifically describes how the project will impact system stability and reliability (30 V.S.A. § 248(b)(3), transportation systems/traffic (10 V.S.A. § 6086(a)(5)), development affecting public investments (10 V.S.A. § 6086(a)(9)(K)), and historic sites (30 V.S.A. § 248(b)(5)).

Q. Please state your name, occupation, and business address.

Response: My name is Rod Viens. I am Executive Vice President with groSolar, which has offices at 205 Billings Farm Road, Building 4, White River Junction, VT 05001. Global Resource Options, Inc. (d/b/a groSolar), headquartered in White River Junction, Vermont, is developing the Project in conjunction with Orchard Road Solar I, LLC "Orchard Road Solar" or "Applicant").

Q. What is the purpose of your testimony?

Response: My testimony supports Orchard Road Solar's application under 30 V.S.A. § 219a to construct and operate a net metered 500 kilowatt (kW AC) solar electric generation project, to be known as the Orchard Road Solar Project ("Project"), located in Middletown Springs, Vermont. I provide background information about the Project, describe aspects of its construction and operation, introduce other witnesses submitting testimony in support of the Project and address certain Section 248 criteria, including system stability and reliability (30 V.S.A. § 248(b)(3)), traffic impacts during construction (10 V.S.A. § 6086(a)(5)), impacts to public investments (10 V.S.A. § 6086(a)(9)(K)), and historic sites (30 V.S.A. § 248(b)(5)).

Q. Please describe your professional background, qualifications and experience.

Response: I graduated from Keene State College with a BS in Management. In addition to serving as Executive Vice President at groSolar, I manage PV equipment procurement as well as project development and general management in Vermont. Prior to the company's sale of its residential division in 2011, I oversaw the direct residential and small commercial installation operations, which constructed multiple megawatts of residential solar in ten states. My commercial project management experience at groSolar has included multi-

residential commercial buildings, schools, and utility scale projects, all ranging in size from 100 kW to 4.99 MW. Prior to joining groSolar, I was Vice President of Operations and Business Development for Yankee Barn Homes, a nationally distributed post and beam home manufacturer, where I established and oversaw the installation construction division and was charged with improving overall company processes. My resume is attached as *Exhibit ORS-RV-1.*

Q. Have you previously testified before the Public Service Board?

Response: Yes. I submitted prefiled testimony in Rutland Renewable Energy, LLC's petition for a Certificate of Public Good for the "City Solar Garden Project," filed with the Public Service Board on December 30, 2013, as well as the petition for a Certificate of Public Good for the "Cold River Project," which was filed on December 20, 2013. I also submitted testimony in Hartford Solarfield, LLC's 500 kW group net metered Hartford Landfill Project, which was filed on November 26, 2014, as well as the GMPSolar Projects in Williston, Richmond, Hartford, Panton, and Williamstown.

Project Description and Overview

Q. Please provide an overview of the Project.

Response: The proposed Project is an approximately 500 kilowatt (kW AC) net metered solar electric generation facility located in Middletown Springs, Vermont. Global Resource Options, Inc. (d/b/a groSolar), headquartered in White River Junction, Vermont, is developing the Project in conjunction with Orchard Road Solar I, LLC, which will generate net metering credits to offset the electric bill of Goddard College and other offtakers. The Project will be sited on approximately 5 acres of land that is being leased from a larger

existing tract of land (approximately 126 acres). As measured from the closest panel, the Project is set back approximately 135 feet from Wescott Road and approximately 400 feet from Orchard Road and includes a 50-foot buffer between the array structures and adjacent property boundaries. The Project is proposed to be located on part of an old apple orchard that is no longer being used for apple production. ***See Site Plan, Exhibit ORS-RV-2.***

The individual solar panels that comprise the array will be mounted on a fixed tilt racking system. The racks will sit upon either steel poles driven into the ground or "earth screws" that are similarly screwed into the ground. This minimizes disturbance to the soil and vegetation at the site. The support structures will hold the solar panels at approximately three feet above the ground, allowing snow to slide off the panels and pile up without compromising energy production. At their highest point, the solar panels will sit approximately nine feet above the ground. Racks for the fixed tilt system will be oriented east-west and hold the panels at a fixed angle of approximately 30 degrees. ***See Site Plan, Exhibit ORS-RV-2.***

Q. Does the Project meet the requirements for a net metering system under 30 V.S.A. § 219a?

Response: Yes. The Project is a group net-metered 500 kW (AC) solar electric generation project that will operate in parallel with facilities of the electric distribution system. The Project employs a renewable energy resource – solar energy – and its electrical output is intended primarily to offset the electricity requirements of its group members.

Group members will include the following meters:

Customer Meter #	Location
E14981223	N. Montpelier Road, Plainfield, VT
E15264415	Greatwood Drive, Plainfield, VT
E14981224	N. Montpelier Road, Plainfield, VT
E14829727	N. Montpelier Road, Plainfield, VT

Orchard Road Solar will finalize the group members and identify specific allocations as required under Board rules prior to Project operations. The Project will use the "stacking" allocation model. Orchard Road Solar will instruct GMP to allocate credits for the kilowatt hours of electricity generated by the Project each month to the meters set forth above in the following order of priority until the monthly electricity usage, charges and fees for each meter are fully offset and satisfied.

If any group members are added, Orchard Road Solar will provide the Board and the interconnecting utility with the allocation amounts, meters, and account numbers per Board rules. The procedure for adding and subtracting meters from the group is at the sole discretion of Orchard Road Solar I, LLC. The binding dispute resolution process for any disputes is as follows: all disputes between the group members will be settled by the group administrator, Orchard Road Solar I, LLC, in its sole discretion. In no event will Orchard Road Solar require the Public Service Board, the Public Service Department, or Green Mountain Power to resolve a dispute within the group net metering system. The designated contact person for all communications is Rod Viens, groSolar, 205 Billings Farm Road, Building 4, White River Junction, VT 05001.

Q. Please state the Project's capacity and anticipated energy production.

Response: The Project will have the following approximate characteristics:

- Nameplate Capacity: 500 kW AC.
- Approximate Number of Panels: 2,250, 330- watt panels mounted on approximately 125 fixed racks (final panel selection will be made at the time of construction and final numbers may vary slightly).
- Approximate Number of String Inverters: 21

The Project is expected to generate approximately 850,000 kWh per year.

Q. Please describe the property on which the Project will be located.

Response: As noted above, the Project will be sited on 5 (+/-) acres leased from the current landowner by Applicant in conjunction with this Project. The Project is proposed to be located on part of an old apple orchard that is no longer being used to grow apples. There is little site preparation needed for the Project other than removing selective tree and brush clearing within the Project area as shown on the site plan. No grading is planned aside from the installation of the access road and equipment pad.

There is a residential structure along with a barn on the northern portion of the 126-acre parcel, separated from the Project area by Wescott Road and Orchard Road approximately 1,000' away. The nearest offsite residential structure from the Project lies approximately 400 feet to the West of the Project. The next nearest residence is on the adjoining parcel to the southeast, approximately 900 feet away. There are no residences in the general vicinity to the east of the Project. The proposed solar array will be accessed via an existing access drive from Wescott Road which will be extended into the Project area. *Exhibit ORS-RV-2.*

Q. Please describe the overall site plan and design objectives.

Response: The overall Project configuration was designed to avoid impacts to environmental resources and to minimize any visual intrusiveness on the surrounding land uses. The siting of the Project on the parcel took a number of factors into account:

1. Minimizing Environmental Impacts: The Project is designed to reduce and limit impacts on natural resources, including:
   - Impervious new surfaces will be limited to equipment pads and construction of gravel access roads into the site.
   - Native soils will remain in place. The areas beneath and around the arrays will remain vegetated, although the land inside and around the perimeter of the fence will be periodically mowed.
   - All wetlands and any respective buffer are avoided.
   - Tree clearing and pruning will be the minimum needed to avoid shading of the solar panels. Following clearing, most stumps will be left in places where no structures will be installed.
2. Optimal Solar Feasibility: The Project is optimally designed to capture solar energy efficiently without undue shading.
3. Setbacks from Residences: All setbacks conform to state minimum standards from highways and bordering property boundaries.

Q. Do the Project's setbacks comply with Vermont statutory setback requirements?

Response: Yes, the Project complies with Vermont's statutory setback requirements. The Project is approximately 135' from Wescott Road and will maintain a minimum 50' buffer from all bordering property boundaries.

Q. Please describe the equipment to be used for the Project.

Response: The Project's equipment consists of the following: approximately 2,250 individual solar photovoltaic panels, a metal rack support structure for fixed racking under the panels to create collector arrays, approximately 21 string inverters with a maximum capacity of 500 kW AC, electrical lines connecting the panels to the inverters and an underground conduit or above ground cable tray connecting to the switchgear enclosures, and underground electrical lines from the switchgear to three 167 kVA pole mounted transformers and the Green Mountain Power ("GMP") distribution system. Underground power will be installed along the proposed access, or alongside it as indicated on the site plan, from Wescott Road to the Project area to minimize aesthetic and environmental impacts that would otherwise result from installing poles leading from Wescott Road into the Project. In addition to the new pole location to support the transformers at the point of interconnection along Wescott Road, approximately three (3) utility poles will be replaced to accommodate new three-phase wire running from the corner of Orchard Road and Wescott Road to the Project. ***See Equipment Specs, Exhibit ORS-RV-3; Site Plan, Exhibit ORS-RV-2; One-Line Diagram, ORS-RV-4.***

The site will be enclosed within a fixed-knot fence with 6-inch vertical spacing that will be 7' to 8' high. To blend into the surrounding landscape, fence posts will be wood. The fencing will be secured and kept close to ground level to avoid access by wildlife. ***Exhibits ORS-RV-2; ORS-RV-3.*** The Equipment Specifications submitted as ***Exhibit ORS-RV-3*** contain pictures and specifications of representative solar panels, inverters, transformers, and fencing. The final selection of equipment will be made after all permitting is complete and Applicant selects equipment manufacturers.

The fence and electrical system conform to applicable electric safety, power quality, and interconnection requirements established by the National Electric Code, and the Institute of Electrical and Electronic Engineers and Underwriters Laboratories.

To summarize, the Project equipment will include:

Solar panels and racks

- Approximately 2,250 panels mounted on fixed racking
- Approximately 125 fixed racks

Inverters and transformer

- Approximately 21 string inverters
- Three pole-mounted 167 kVA transformers
- One approximately 10' x 20' equipment pad next to the access for switchgear, metering equipment, and data acquisition system
- Electrical lines will run in a conduit underground from the switchgear to the pole-mounted transformers along Wescott Road

Fencing

- Solidlock for Game fixed-knot fence with 6-inch vertical spacing that will be between 7' and 8' high

Q. Please describe the plans for the Project's electrical system, including interconnection with the interconnecting utility's distribution system.

Response: The electrical system consists of groups of solar panels wired in series, each a "string." The DC power from a few strings runs to the string inverter where it is converted to AC power. There will be approximately 21 string inverters with a maximum output of

500 kW AC. From there, wiring will run from the inverters to the pole-mounted transformers and the interconnection point along Wescott Road. ***See Site Plan, Exhibit ORS-RV-2.***

Q. How will the Site be accessed and how will the equipment be delivered?

Response: The proposed solar array will be accessed via an existing access drive from the Wescott Road which will be extended as a 12' permanent access drive into the Project area. A route for the access, approximate widths, and a cross-section are shown on the site plan. ***Exhibit ORS-RV-2.***

Equipment will be transported to the site via Route 140 to Orchard Road and finally to Wescott Road. The solar panels and tracker rack components will be shipped on pallets, typically delivered by standard tractor-trailer trucks. Approximately 8 (+/-) truck trips will be required to deliver the solar panels, racking, and inverters over an approximately 4-week period. Other Project equipment, e.g., wire, cable, conduit, and construction materials, will also be transported on standard-width trucks.

On-site heavy construction equipment will be limited to pile-driving equipment for installing the racking, backhoes and the like for conduit excavation and equipment pad construction, and a cement truck for delivery of concrete for the foundations under the equipment pad.

Q. What is the anticipated sequencing and schedule for Project construction?

Response: Construction of the Project is expected to take approximately 10 weeks following receipt of the necessary approvals. The first phase of construction will include installing silt fencing, any required site work, and beginning a perimeter fence around the solar array.

Improvements and an extension of the gravel access will then be constructed from Wescott Road extending into the Project.

The second phase of construction will involve construction of the solar array support structures, underground trenching and installation of conduit between arrays and to transformer and equipment pad/vault locations. Construction equipment for the Project will be primarily limited to lightweight pile or auger driving equipment and an excavator for the trenching.

The final phase of construction will involve securing the solar modules, installation of the string inverters, wiring to these inverters, and installation of the data acquisition system, transformer installation, and completion of the perimeter fence. Following completion of these activities, the system will be tested and commissioned for continuous operation.

Q. What are the operation and maintenance activities for the Project?

Response: The operation of the solar Project is totally automatic and requires no on-site personnel. The plant will be continually monitored via the internet to confirm proper operation and performance. Energy metering will also be accomplished by remote telemetry.

On-site maintenance activities will be limited to periodic vegetative management, snow removal in winter to provide access to the Project, and annual equipment and wiring inspections.

Q. Has the Applicant provided 45-day notice pursuant to Board Rule 5.110(C)?

Response: Yes, 45-day notice letters were mailed to the Local and Regional bodies, adjoining landowners, the Public Service Board, Green Mountain Power, and State Agencies entitled to service on March 30, 2016. Applicant later discovered an error in the application materials in which the closest residence was inadvertently identified as 1,000 feet away when the closest residence was actually about 400 feet away. The landowner of the adjoining property brought this to Applicant's attention and, although not a substantial change, Applicant chose to reissue the 45-day notice on May 11, 2016 to correct the discrepancy. Applicant is committed to the full and accurate disclosure of information about the Project. The May 11, 2016 45-day notice letter and full list of recipients is attached as ***Exhibit ORS-RV-5.***

Q. Have other efforts been made to inform the local community of the Project?

Response: Yes. Applicant has met with community members throughout this process to discuss the Project and obtain feedback. On March 10, 2016, we met with the Middletown Springs Selectboard to discuss the Project. On June 2, 2016, we met with Middletown Springs in a special meeting noticed by the Town, with the Selectboard and Planning Commission members in attendance, to hear from local residents and property owners about the Project. Numerous community members attended to hear the proposal and ask questions. Applicant continues to work with adjoining landowners and Town officials to maintain stakeholder involvement and answer any lingering questions.

Q. Please describe any comments that Applicant has received to date from the local or regional bodies or others in the local community.

Response: Following the release of the 45-day notice, Applicant received two comment letters from adjoining landowners to the east and west of the Project. Questions and comments from the adjoining landowners pertained to visibility, radio frequency interference, and electromagnetic fields. Applicant has been in touch with the adjoining landowners to answer these questions and respond to feedback. In addition, Applicant received several questions at the special meeting administered by the Town. Questions at the special meeting ranged from solar panel materials to visibility questions, but the majority of the community appeared in support of the Project, with select landowners who originally sent comment letters expressing some concern. For example, one question that came from that meeting was whether Applicant would be using solar panels with cadmium in them. Applicant confirmed for the landowners and the Town that there is no cadmium in the panels proposed for the Project. Some thin film panels contain cadmium, but not the type of panels being installed for this Project. Largely, the response from the Town, aside from a few neighbor concerns described above, has been favorable. The Town indicated they will likely file a Motion to Intervene to stay attuned of any changes, but had no additional concerns at the time of this filing.

Q. Please describe Applicant's efforts to date to address any potential issues regarding the Project.

Response: In an effort to address potential questions and concerns about the Project received from adjoining landowners, Applicant has kept in contact with the landowners and offered to meet on site with an aesthetics consultant to better assess the impact and propose

landscaping. Applicant has since worked with SE Group to identify a landscaping plan that helps to screen views into the Project from these areas. The landscaping plan is further discussed in the prefiled testimony of Mark Kane.

Q. Is the proposed Project within GMP's statutory net metering cap?

Response: Yes, the proposed Project is within GMP's statutory net metering cap pursuant to 30 V.S.A. 219a(h(1)(A). An interconnection application was submitted to GMP on October 26, 2015 prior to the November 13, 2015 cutoff for GMP acceptance of new net metering applications.

Introduction of Other Witnesses

Q. Please identify the other witnesses offering testimony in support of this filing.

Response: In addition to my testimony, the following witnesses are providing testimony in support of this Project:

- Mark Kane, SE Design Group: provides a report addressing orderly development of the region, aesthetics, and visual impacts.
- Seth Goddard, Krebs & Lansing: provides testimony addressing waste disposal, soil erosion, and noise.
- Dori Barton, Arrowwood Environmental: provides a report faddressing the environmental criteria.

SECTION 248 CRITERIA

Orderly Development of the Region – 30 V.S.A. § 248(b)(1)

Q. Will the Project unduly interfere with the orderly development of the region?

Response: No, the Project will not unduly interfere with the orderly development of the region and will not cause any direct impacts on the capacity of the region to develop. The Project will not cause an undue burden on public roadways or other types of municipal or state services or infrastructure. It will not utilize land or resources that are otherwise specifically contemplated for other forms of development under either the town or regional plans, as further described in Mark Kane's report.

System Stability and Reliability - 30 V.S.A. § 248(b)(3)

Q. Will the Project have an adverse impact on GMP's system or reliability?

Response: No. Applicant has applied for interconnection with GMP and received a formal response that it passed Rule 5.500 criteria and Fast Track analysis for interconnection. *Exhibit ORS-RV-6*. Thus, as determined by GMP, the Project will not have an adverse impact on GMP's system stability or reliability and no further studies are necessary. Applicant will execute an interconnection agreement prior to interconnection and commercial operation of the facility. Further, Applicant will be responsible for all upgrades required to interconnect the Project.

Q. Does the Project involve the upgrade of a distribution line to interconnect the facility?

Response: Yes, there is a short stretch of distribution line along Wescott Road that will need to be upgraded as indicated in the Fast Track. *Exhibit ORS-RV-6.* This consists of the

replacement of approximately three (3) existing poles and approximately 1,700' of single phase wire extending west from Orchard Road along Wescott Road to the Project; 3-phase wire will be installed. In addition, a new pole location will support three pole-mounted transformers at the point of interconnection. The interconnection route and proposed upgrades are shown in the Project site plan. ***Exhibit ORS-RV-2***. Outside the scope of this Project, GMP is in the process of replacing several poles along Orchard Road.

Historic Sites – 30 V.S.A. § 248(b)(5)

Q. Will the Project have an undue adverse effect on any historic sites?

Response: No. Applicant discussed the Project with Scott Dillon from the Vermont Division for Historic Preservation ("VDHP"). Scott Dillon visited the site and reviewed for the potential effect on historic sites and archaeologically sensitive areas; none were identified. VDHP has provided a draft letter summarizing its conclusion that the Project will have no effect on any historic sites, which is included as ***Exhibit ORS-RV-7.*** Based on VDHP's determination, the Project will not have an undue adverse effect on any historic resources. Applicant understands that VDHP intends to submit a final copy of the letter provided to the Public Service Board after the Application is submitted.

Traffic – 10 V.S.A. § 6086(a)(5)

Q. Will the Project cause unreasonable congestion or unsafe conditions with respect to transportation systems?

Response: The Project will not cause unreasonable congestion or unsafe conditions with respect to transportation systems. Access to the site will be via Route 140, Orchard Road, and Wescott Road using the existing point of entry and the extended access drive. During

construction, approximately 8 +/- tractor trailers will deliver modules, racking, and inverters to the site via the access point off of Wescott Road. Following initial delivery, construction related traffic will be limited to more infrequent deliveries for smaller, necessary electrical supplies and workers entering and exiting the site.

During operation of the Project, entry to the Project will be limited to maintenance and repairs, and therefore there will be only occasional Project-related traffic that will not cause unreasonable traffic or unsafe conditions.

Public Investments – 10 V.S.A. § 6086(a)(9)(K)

Q. Will the Project unnecessarily or unreasonably endanger the public or quasi-public investment in adjacent lands, services, or facilities, or materially jeopardize or interfere with the public's use and enjoyment of those lands, services, or facilities?

Response: No. The closest public investment to the Project site is Wescott Road, located to the North of the Project. The Project will not impact or create any adverse burdens on this public investment given the limited and temporary use of the road during construction and operation. Therefore, there will be no adverse burden or endangerment of this public investment.

Q. What are the plans for the site when the Project reaches the end of its useful life?

Response: At the end of the Project's useful life, the Project equipment will be removed from the site and sold, recycled or disposed of in accordance with applicable waste regulations. Any stockpiled soils from Project construction will be graded back into the Project parcel and the land will remain viable for whatever uses the landowner chooses.

Q. Does this conclude your testimony at this time?

Response: Yes, it does.

I, Rod Viens, do hereby swear and affirm under the penalty of law that the information provided in my testimony is accurate to the best of my knowledge, and that I have personal knowledge of and am able to testify as to the validity of the information contained in my testimony and attached exhibits.

_____

State of Vermont
County of Vermont

The foregoing instrument was signed and acknowledged before me this 14th day of July, 2016 at Hartford, Vermont by Rod Viens _____ who acknowledged the act to be his free act and deed.

_____
Notary Public

Name of Notary: Jordana Jusidman

Commission Expires: 2/10/19

Rod Viens

86 I Barrister Drive
White River Junction VT

(802) 299 5668
rviens@hotmail.com

Multifaceted executive and entrepreneur who undertakes complex assignments, meets tight deadlines, and delivers superior performance. Possesses practical knowledge that spans business development through operations and project management. Skillful at empowering team members to highlight individual aptitudes while collaborating as a unit. Combines expert orchestration of financial management, operations, and personal management with a history of surpassing organizational goals. Reputation for strong work ethic, positive energy level, approachability, and consistent commitment to corporate success and customer satisfaction. Core competencies include:

Business Development * Project Management * Project Development * Interpersonal Skills * Customer Focused * Contract Management * Entrepreneurial * Financial Analysis * Strategic Planning * Cross-Functional Interaction * Operational Efficiencies * Employee Relations * Staff Development * Budget Management * Resource Management

---

PROFESSIONAL EXPERIENCE

Global Resource Options, Inc. (groSolar) - WRJ, VT 2008 - Current
Leading national commercial solar development, engineering, procurement, and construction company.

Executive Vice President
2012 - Present

- Collaborated in the launch of the groSolar owned project development channel.
- Manage Vermont project development group responsible for permitting multiple megawatt plus projects.
- Worked with strategic consultant to reposition groSolar following sale of the residential channel to Solar City. (2011 - 2013)

Vice President – Operations
2008 - 2012

Operational Highlights:

- Improved east coast residential and commercial installation capabilities - defined and refined operation processes. Responsible for installation of 250kW-400kW of residential solar monthly.
- Successfully integrated Borrego Residential Solar East and West Coast operations following groSolar's acquisition.

- Developed relationships with sub-contractors to construct small commercial projects ranging in size from 50kW to 400kW.
- Responsible for the solar product distribution channel inclusive of the residential and small commercial engineering services group and inside sales (2010 - 2013)

Sales Highlights:

- Owned sales and project management relationship with key commercial client who installed just under 1 megawatt at multiple sites and buildings.
- Responsible for negotiating sales contracts on all regional commercial projects.
- Worked closely with engineering and sales to refine the residential solar evaluation process.

Yankee Barn Homes - Grantham, NH & West Chester, PA 2003 - 2008
International timber frame home construction company.

Cost Estimator - 2003
Contracts & Scheduling Manager - 2004
Project Manager - 2005
Vice President- Business Development & Operations – 2006

Operational Highlights:

- Launched an onsite installation construction department which allowed the company to forward integrate and control specifications in the field.
- Collaborated with software engineers and cross functional members to design and implement an ERP system.
- Developed relationships with sub-contractors to install products in the field.

Sales and Marketing Highlights:

- Created two new product lines in response to marketplace analysis.
- Established an Ireland affiliate to distribute and install product.
- Managed sales team that surpassed annual company sales record.

Customer Relation Highlights:

- Initiated and managed the implementation of an interactive 3-D software program which allows our customers to visualize their construction plans via the web.
- Championed customer service relations management policies within the entire company.

George Chait Construction - Sunapee NH 2001 - 2003

Carpenter Apprentice

- Acquired necessary skills to advance from unskilled laborer to skilled craftsman in 18 months.

Athlete's Shoe & Footwear Center - Claremont, NH 1990 - 2001

Proprietor

- Grew operation to six locations.
- Sold operation – June 2001.

EDUCATION

Keene State College, Keene, NH 1989
Bachelor of Science - Management

Exhibit ORS-RV-2

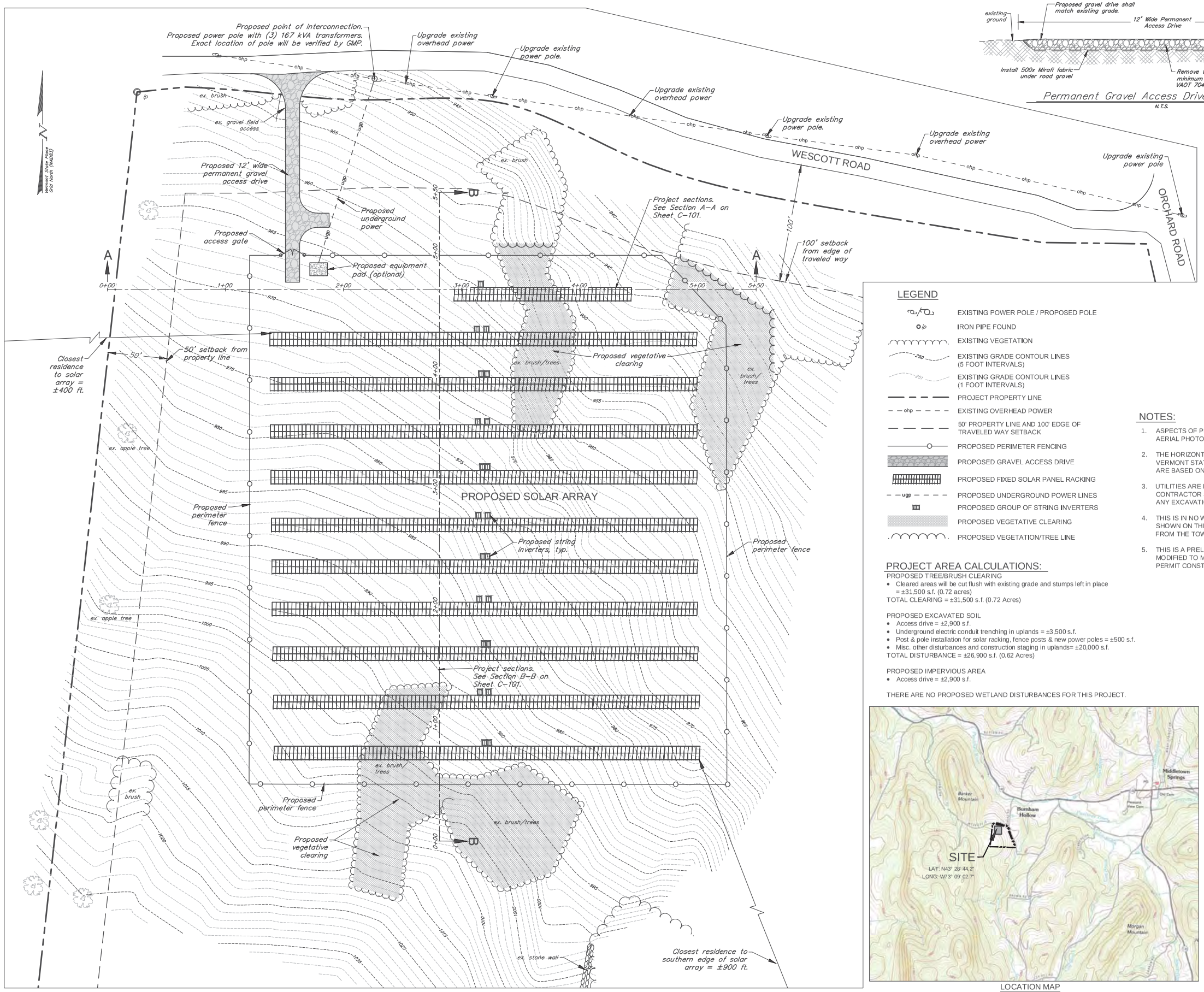

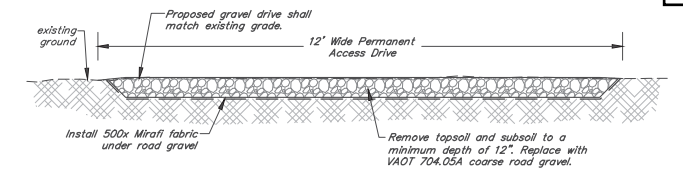

Permanent Gravel Access Drive Cross Section

N.T.S.

LEGEND

- EXISTING POWER POLE / PROPOSED POLE
- IRON PIPE FOUND
- EXISTING VEGETATION
- EXISTING GRADE CONTOUR LINES (5 FOOT INTERVALS)
- EXISTING GRADE CONTOUR LINES (1 FOOT INTERVALS)
- PROJECT PROPERTY LINE
- EXISTING OVERHEAD POWER
- 50' PROPERTY LINE AND 100' EDGE OF TRAVELED WAY SETBACK
- PROPOSED PERIMETER FENCING
- PROPOSED GRAVEL ACCESS DRIVE
- PROPOSED FIXED SOLAR PANEL RACKING
- PROPOSED UNDERGROUND POWER LINES
- PROPOSED GROUP OF STRING INVERTERS
- PROPOSED VEGETATIVE CLEARING
- PROPOSED VEGETATION/TREE LINE

NOTES:

1. ASPECTS OF PLAN ARE APPROXIMATE AND DERIVED FROM AERIAL PHOTOGRAPHY.
2. THE HORIZONTAL COORDINATE SYSTEM IS BASED ON NAD83 VERMONT STATE PLANE 4400 (US SURVEY FEET). ELEVATIONS ARE BASED ON THE NAVD88 (US SURVEY FEET).
3. UTILITIES ARE NOT WARRANTED TO BE COMPLETE OR ACCURATE, CONTRACTOR SHALL CONTACT DIG SAFE BEFORE BEGINNING ANY EXCAVATION.
4. THIS IS IN NO WAY A BOUNDARY SURVEY. PROPERTY LINES SHOWN ON THIS PLAN ARE BASED ON TAX MAP INFORMATION FROM THE TOWN OF MIDDLETOWN SPRINGS.
5. THIS IS A PRELIMINARY DESIGN PLAN. FINAL DESIGN WILL BE MODIFIED TO MATCH EQUIPMENT PURCHASED AND POSSIBLE PERMIT CONSTRAINTS REVEALED DURING PROJECT'S REVIEW.

PROJECT AREA CALCULATIONS:

PROPOSED TREE/BRUSH CLEARING
- Cleared areas will be cut flush with existing grade and stumps left in place = ±31,500 s.f. (0.72 acres)

TOTAL CLEARING = ±31,500 s.f. (0.72 Acres)

PROPOSED EXCAVATED SOIL
- Access drive = ±2,900 s.f.
- Underground electric conduit trenching in uplands = ±3,500 s.f.
- Post & pole installation for solar racking, fence posts & new power poles = ±500 s.f.
- Misc. other disturbances and construction staging in uplands= ±20,000 s.f.

TOTAL DISTURBANCE = ±26,900 s.f. (0.62 Acres)

PROPOSED IMPERVIOUS AREA
- Access drive = ±2,900 s.f.

THERE ARE NO PROPOSED WETLAND DISTURBANCES FOR THIS PROJECT.

LOCATION MAP

SCALE: 1" = 1/2 Mile

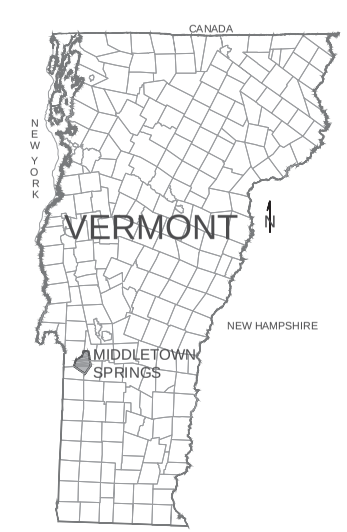

ORCHARD ROAD SOLAR

30 Orchard Road
Middletown Springs, Vermont

groSolar
205 Billings Farm Road, Building 4
White River Junction, VT 05001
www.grosolar.com

Krebs & Lansing Consulting Engineers, Inc.
164 Main Street, Suite 201
Colchester, VT 05446
T: (802) 878-0375
F: (802) 878-9618
email@krebsandlansing.com
KrebsandLansing.com

ISSUED FOR PERMIT REVIEW
NOT FOR CONSTRUCTION

SOURCE DATA LEGEND

MAPPING SOURCE DATA USED FOR PLAN COMPILATION

Civil Engineering:

Krebs and Lansing Consulting Engineers, Inc.
164 Main Street, Suite. 201
Colchester, Vermont 05446

Environmental:

Arrowwood Environmental
950 Bert White Road
Huntington, Vermont 05462

0' 20' 40' 80' 120'
0" 1" 2" 3"
STANDARD GRAPHIC SCALE (1" = 40')
VALID WHEN PLOTTED ON 24" BY 26" MEDIA

0' 44.45' 88.90'
0" 0.5" 1"
REDUCED GRAPHIC SCALE (1" = 88.9')
VALID WHEN PLOTTED ON 11" BY 17" MEDIA

Proposed Solar Array

SHEET REV.	REVISIONS/COMMENTS	DATE

Drawing Title:

SITE PLAN

DATE of Issue: 07/13/16

Drawn by: SDG | Checked by: GTD

Project No.: 16123 | Scale: Varies

Drawing No.: C-100 | Rev No.:

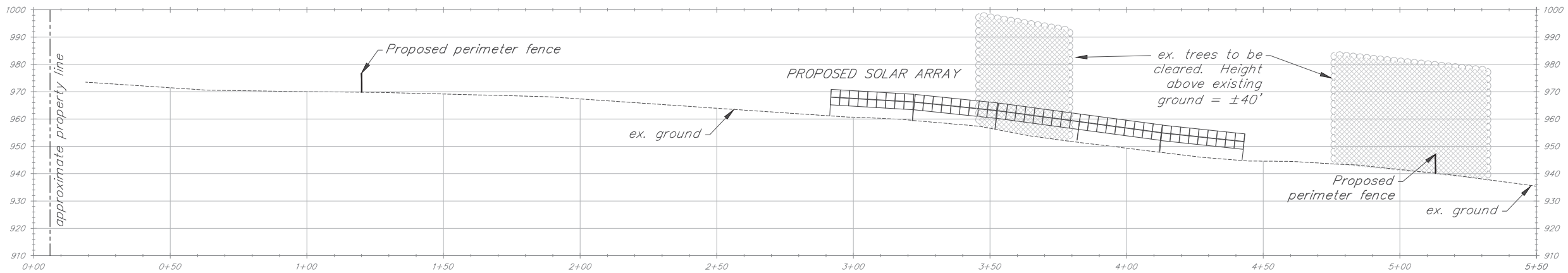

SECTION A-A

HORZ. & VERT. SCALE: 1" = 20'

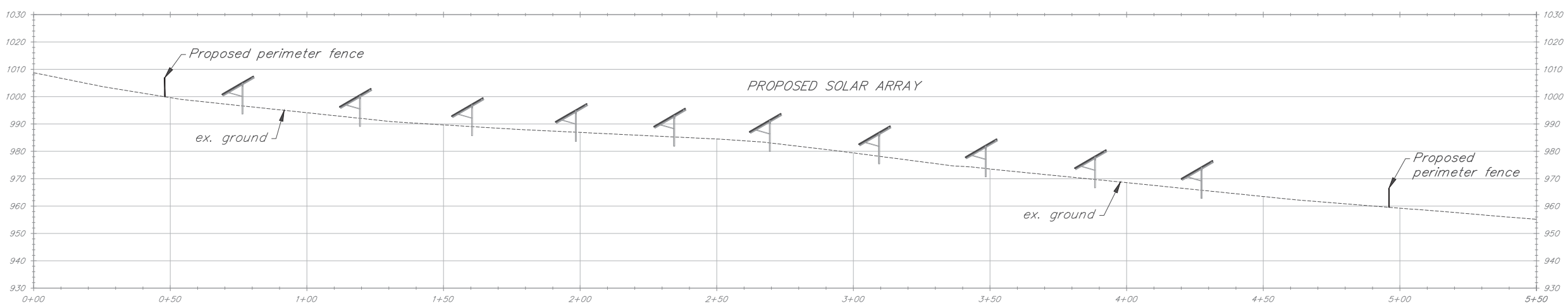

SECTION B-B

HORZ. & VERT. SCALE: 1" = 20'

ORCHARD ROAD SOLAR

30 Orchard Road
Middletown Springs, Vermont

groSolar

205 Billings Farm Road, Building 4
White River Junction, VT 05001
www.grosolar.com

Krebs & Lansing Consulting Engineers, Inc.
164 Main Street, Suite 201
Colchester, VT 05446
T: (802) 878-0375
F: (802) 878-9618
email@krebsandlansing.com
KrebsandLansing.com

ISSUED FOR PERMIT REVIEW
NOT FOR CONSTRUCTION

SOURCE DATA LEGEND

MAPPING SOURCE DATA USED FOR PLAN COMPILATION

Civil Engineering:

Krebs and Lansing Consulting Engineers, Inc.
164 Main Street, Suite. 201
Colchester, Vermont 05446

Environmental:

Arrowwood Environmental
950 Bert White Road
Huntington, Vermont 05462

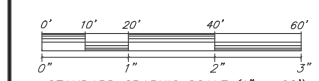

STANDARD GRAPHIC SCALE (1" = 20')
VALID WHEN PLOTTED ON 24" BY 26" MEDIA

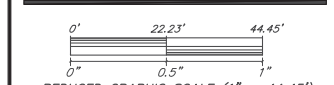

REDUCED GRAPHIC SCALE (1" = 44.45')
VALID WHEN PLOTTED ON 11" BY 17" MEDIA

Proposed
Solar Array

SHEET REV.	REVISIONS/COMMENTS	DATE

Drawing Title:

PROJECT SECTIONS

DATE of Issue: 07/13/16

Drawn by: SDG | Checked by: GTD

Project No.: 16123 | Scale: 1"=20'

Drawing No.: C-101 | Rev No.:

Exhibit ORS-RV-3

/ Perfect Welding / Solar Energy / Perfect Charging

Fronius

SHIFTING THE LIMITS

FRONIUS SYMO

/ Powering commercial projects that last. The Fronius Symo.

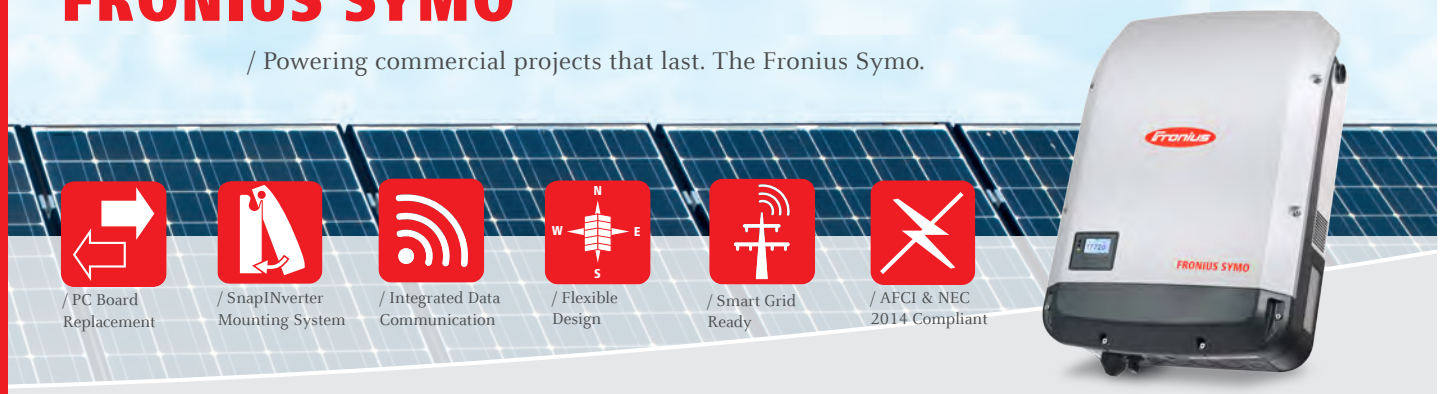

/ PC Board Replacement

/ SnapINverter Mounting System

/ Integrated Data Communication

/ Flexible Design

/ Smart Grid Ready

/ AFCI & NEC 2014 Compliant

/ Featuring ten models ranging from 10 kW to 24 kW, the transformerless Fronius Symo is the ideal compact three-phase inverter for all commercial applications. The high system voltage and wide input range ensure maximum flexibility in system design. With low roof loading, NEMA 4X and 1000 V DC rating, the Fronius Symo can be mounted in many different ways, including flat on a roof or on a pole. The modern design is equipped with the SnapINverter mounting system, allowing for lightweight, secure and convenient installation. Several industry-leading features are available with the Fronius Symo including Wi-Fi®* and SunSpec Modbus interfaces for seamless monitoring and data-logging, field proven Arc Fault Circuit Interruption (AFCI), NEC 2014 compliant, and Fronius' superb online and mobile monitoring platform Fronius Solar.web.

TECHNICAL DATA FRONIUS SYMO (10.0-3 208-240, 12.0-3 208-240, 10.0-3 480, 12.5-3 480, 15.0-3 208)

INPUT DATA		SYMO 10.0-3 208-240	SYMO 12.0-3 208-240	SYMO 10.0-3 480	SYMO 12.5-3 480	SYMO 15.0-3 208
Recommended PV power (kWp)		8.0 - 13.0	9.5 - 15.5	8.0 - 13.0	10.0 - 16.0	12.0 - 19.5
Max. usable input current (MPPT1/MPPT 2)		25.0 A / 16.5 A				50.0 A
Max. usable input current total (MPPT 1 + MPPT 2)		41.5 A				50.0 A
Max. array short circuit current (1.5 * Imax) MPPT 1/MPPT 2)		37.5 A / 24.8 A				75.0 A
Integrated DC string fuse holders		NA				6- and 6+
MPP-voltage range		300 - 500 V		300 - 800 V	350 - 800 V	325 - 850 V
Operating voltage range		200 - 600 V		200 - 1000 V		325 – 1000 V
Max. input voltage		600 V		1000 V		
Nominal input voltage	208 V	350 V	350 V	NA	NA	325 V
	240 V	370 V	370 V	NA	NA	NA
	480 V	NA	NA	675 V	685 V	NA
Admissable conductor size DC		AWG 14 - AWG 6 copper direct, AWG 6 aluminum direct, AWG 4 - AWG 2 copper or aluminum with input combiner				
Number of MPPT		2				1

OUTPUT DATA		SYMO 10.0-3 208-240	SYMO 12.0-3 208-240	SYMO 10.0-3 480	SYMO 12.5-3 480	SYMO 15.0-3 208
Max. output power	208 V	9995 VA	11995 VA	NA	NA	15000 VA
	240 V	9995 VA	11995 VA	NA	NA	NA
	480 V	NA	NA	9995 VA	12495 VA	NA
Max. continuous output current	208 V	27.7 A	33.3 A	NA	NA	41.6 A
	240 V	24.0 A	28.9 A	NA	NA	NA
	480 V	NA	NA	12.0 A	15.0 A	NA
Recommended OCPD/AC breaker size	208 V	35 A	45 A	NA	NA	60 A
	240 V	30 A	40 A	NA	NA	NA
	480 V	NA	NA	15 A	20 A	NA
Max. Efficiency		97.0 %	97.0 %	98.1 %	98.1 %	97.3%
CEC Efficiency	208 V	96.5 %	96.5 %	NA	NA	96.5%
	240 V	96.5 %	96.5 %	NA	NA	NA
	480 V	NA	NA	96.5 %	97.0 %	NA
Admissable conductor size AC		AWG 14 - AWG 6				
Grid connection		208 / 240 V	208 / 240 V	480 V Delta +N**		208 V
Frequency		60 Hz				
Total harmonic distortion		< 1.5 %	< 1.75 %	< 1.75 %	< 1.5 %	< 3.5%
Power factor		0 - 1 ind./cap.				

TECHNICAL DATA (10.0-3 208/240, 12.0-3 208/240, 10.0-3 480, 12.5-3 480, 15.0-3 208)

GENERAL DATA	STANDARD WITH ALL FRONIUS SYMO MODELS
Dimensions (width x height x depth)	20.1 x 28.5 x 8.9 inches
Degree of protection	NEMA 4X
Night time consumption	< 1 W
Inverter topology	Transformerless
Cooling	Variable speed fan
Installation	Indoor and outdoor installation
Ambient operating temperature range	-40°F - + 140 °F (-40 - +60 °C)
Permitted humidity	0 - 100 % (non-condensing)
DC connection terminals	6x DC+ and 6x DC- screw terminals for copper (solid / stranded / fine stranded) or aluminum (solid / stranded)
AC connection terminals	Screw terminals 14-6 AWG
Certificates and compliance with standards *(Except Symo 15.0 208 V)*	UL 1741-2010, UL1998 (for functions: AFCI and isolation monitoring), IEEE 1547-2003, IEEE 1547.1-2008, ANSI/IEEE C62.41, FCC Part 15 A & B, NEC Article 690, C22. 2 No. 107.1-01 (September 2001), UL1699B Issue 2 -2013, CSA TIL M-07 Issue 1 -2013
Certificates and compliance with standards *(Symo 15.0 208 V)*	UL 1741-2015, UL1998 (for functions: AFCI, RCMU and isolation monitoring), IEEE 1547-2003, IEEE 1547.1-2003, ANSI/IEEE C62.41, FCC Part 15 A & B, NEC 2014 Article 690, C22. 2 No. 107.1-01 (September 2001) , UL1699B Issue 2 -2013, CSA TIL M-07 Issue 1 -2013

GENERAL DATA	SYMO 10.0-3 208-240	SYMO 12.0-3 208-240	SYMO 10.0-3 480	SYMO 12.5-3 480	SYMO 15.0-3 208
Weight	91.9 lbs.		76.7 lbs.		78.3 lbs.

PROTECTIVE DEVICES	STANDARD WITH ALL FRONIUS SYMO MODELS
AFCI & 2014 NEC Compliant	Yes
DC disconnect	Yes
DC reverse polarity protection	Yes
Ground Fault Protection with Isolation Monitor Interrupter	Yes

INTERFACES	AVAILABLE WITH ALL FRONIUS SYMO MODELS
USB (A socket)	Datalogging and inverter update possible via USB
2x RS422 (RJ45 socket)	Fronius Solar Net, interface protocol
AVAILABLE WITH THE FRONIUS DATAMANAGER 2.0 CARD (ONLY ONE CARD REQUIRED FOR UP TO 100 INVERTERS)	
Wi-Fi/Ethernet/Serial/ Datalogger and webserver	Wireless standard 802.11 b/g/n / Fronius Solar.web, SunSpec Modbus TCP, JSON / SunSpec Modbus RTU
6 inputs and 4 digital I/Os	Load management; signaling, multipurpose I/O

**+N for sensing purposes - no current carrying conductor.

TECHNICAL DATA (15.0-3 480, 17.5-3 480, 20.0-3 480, 22.7-3 480, 24.0-3 480)

INPUT DATA		SYMO 15.0-3 480	SYMO 17.5-3 480	SYMO 20.0-3 480	SYMO 22.7-3 480	SYMO 24.0-3 480
Recommended PV power (kWp)		12.0 – 19.5	14.0 - 23.0	16.0 - 26.0	18.0 - 29.5	19.0 - 31.0
Max. usable input current (MPPT1/MPPT 2)		33.0 A / 25.0 A				
Max. usable input current total (MPPT 1 + MPPT 2)		51 A				
Max. array short circuit current (1.5 * Imax) MPPT 1/MPPT 2)		49.5 A / 37.5 A				
Integrated DC string fuse holders		NA	NA	6- and 6+		
MPP-voltage range		350 - 800 V	400 - 800 V	450 - 800 V	500 - 800 V	500 - 800 V
Operating voltage range		200 - 1000 V				
Max. input voltage		1000 V				
Nominal input voltage	208 V	NA	NA	NA	NA	NA
	240 V	NA	NA	NA	NA	NA
	480 V	685 V	695 V	710 V	720 V	720 V
Admissable conductor size DC		AWG 14 - AWG 6 copper direct, AWG 6 aluminum direct, AWG 4 - AWG 2 copper or aluminum with input combiner				
Number of MPPT		2				

TECHNICAL DATA (15.0-3 480, 17.5-3 480, 20.0-3 480, 22.7-3 480, 24.0-3 480)

OUTPUT DATA		SYMO 15.0-3 480	SYMO 17.5-3 480	SYMO 20.0-3 480	SYMO 22.7-3 480	SYMO 24.0-3 480
Max. output power	208 V	NA	NA	NA	NA	NA
	240 V	NA	NA	NA	NA	NA
	480 V	14995 VA	17495 VA	19995 VA	22727 VA	23995 VA
Max. continuous output current	208 V	NA	NA	NA	NA	NA
	240 V	NA	NA	NA	NA	NA
	480 V	18.0 A	21.0 A	24.0 A	27.3 A	28.9 A
Recommended OCPD/AC breaker size	208 V	NA	NA	NA	NA	NA
	240 V	NA	NA	NA	NA	NA
	480 V	25 A	30 A	30 A	35 A	40 A
Max. Efficiency		98.0 %	98.0 %			
CEC Efficiency	208 V	NA	NA	NA	NA	NA
	240 V	NA	NA	NA	NA	NA
	480 V	97.0 %	97.5 %	97.5 %	97.5 %	97.5 %
Admissable conductor size AC		AWG 14 - AWG 6				
Grid connection		480 V Delta +N**				
Frequency		60 Hz				
Total harmonic distortion		< 1.5 %	< 1.25 %	< 1.0 %	<1.25 %	< 1.0 %
Power factor		0 - 1 ind./cap.				

**+N for sensing purposes - no current carrying conductor.

TECHNICAL DATA (15.0-3 480, 17.5-3 480, 20.0-3 480, 22.7-3 480, 24.0-3 480)

GENERAL DATA	STANDARD WITH ALL FRONIUS SYMO MODELS
Dimensions (width x height x depth)	20.1 x 28.5 x 8.9 inches
Degree of protection	NEMA 4X
Night time consumption	< 1 W
Inverter topology	Transformerless
Cooling	Variable speed fan
Installation	Indoor and outdoor installation
Ambient operating temperature range	-40°F - + 140 °F (-40 - +60 °C)
Permitted humidity	0 - 100 % (non-condensing)
DC connection terminals	6x DC+ and 6x DC- screw terminals for copper (solid / stranded / fine stranded) or aluminum (solid / stranded)
AC connection terminals	Screw terminals 14-6 AWG
Certificates and compliance with standards	UL 1741-2010, UL1998 (for functions: AFCI and isolation monitoring), IEEE 1547-2003, IEEE 1547.1-2008, ANSI/IEEE C62.41, FCC Part 15 A & B, NEC Article 690, C22. 2 No. 107.1-01 (September 2001), UL1699B Issue 2 -2013, CSA TIL M-07 Issue 1 -2013

GENERAL DATA	SYMO 15.0-3 480	SYMO 17.5-3 480	SYMO 20.0-3 480	SYMO 22.7-3 480	SYMO 24.0-3 480
Weight	95.7 lbs.				

PROTECTIVE DEVICES	STANDARD WITH ALL FRONIUS SYMO MODELS
AFCI & 2014 NEC Compliant	Yes
DC disconnect	Yes
DC reverse polarity protection	Yes
Ground Fault Protection with Isolation Monitor Interrupter	Yes

INTERFACES	AVAILABLE WITH ALL FRONIUS SYMO MODELS
USB (A socket)	Datalogging and inverter update possible via USB
2x RS422 (RJ45 socket)	Fronius Solar Net, interface protocol
AVAILABLE WITH THE FRONIUS DATAMANAGER 2.0 CARD (ONLY ONE CARD REQUIRED FOR UP TO 100 INVERTERS)	
Wi-Fi/Ethernet/Serial/ Datalogger and webserver	Wireless standard 802.11 b/g/n / Fronius Solar.web, SunSpec Modbus TCP, JSON / SunSpec Modbus RTU
6 inputs and 4 digital I/Os	Load management; signaling, multipurpose I/O

FRONIUS SYMO 24.0-3 480 TEMPERATURE DERATING CURVE

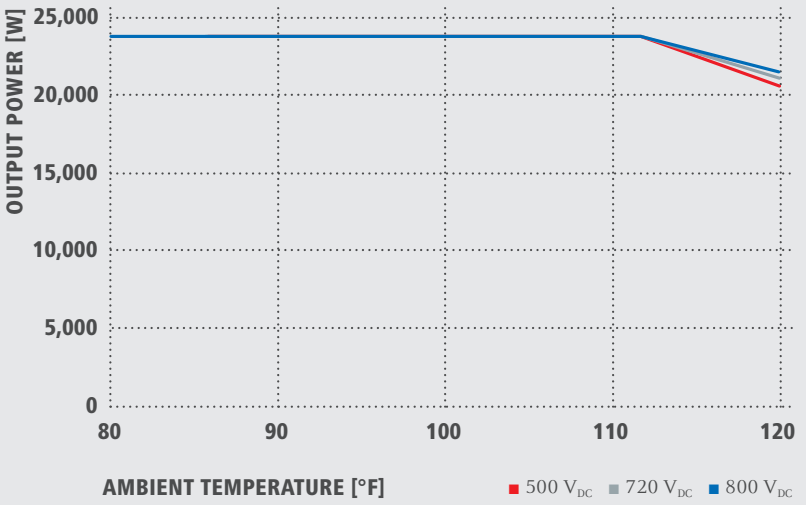

FRONIUS SYMO 24.0-3 480 CEC EFFICIENCY CURVE

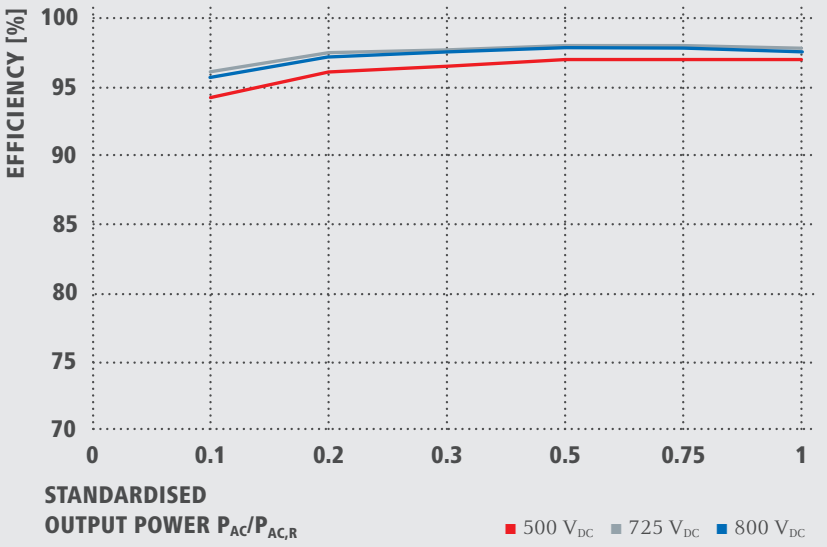

/ Perfect Welding / Solar Energy / Perfect Charging

WE HAVE THREE DIVISIONS AND ONE PASSION: SHIFTING THE LIMITS OF POSSIBILITY.

/ Whether welding technology, photovoltaics or battery charging technology – our goal is clearly defined: to be the innovation leader. With around 3,300 employees worldwide, we shift the limits of what's possible - our record of over 900 granted patents is testimony to this. While others progress step by step, we innovate in leaps and bounds. Just as we've always done. The responsible use of our resources forms the basis of our corporate policy.

Further information about all Fronius products and our global sales partners and representatives can be found at **www.fronius.com**

v05 May 2015 EN

Fronius USA LLC
6797 Fronius Drive
Portage, IN 46368
USA
pv-support-usa@fronius.com
www.fronius-usa.com

Q.PLUS L-G4.2 330-340

Q.ANTUM SOLAR MODULE

The Q.ANTUM solar module Q.PLUS L-G4.2 with power classes up to 340 Wp is the strongest module of its type on the market globally. Powered by 72 Q CELLS solar cells Q.PLUS L-G4.2 was specially designed for large solar power plants to reduce BOS costs. Only Q CELLS offers German engineering quality with our unique triple Yield Security.

LOW ELECTRICITY GENERATION COSTS

Higher yield per surface area and lower BOS costs thanks to higher power classes and an efficiency rate of up to 17.4 %.

INNOVATIVE ALL-WEATHER TECHNOLOGY

Optimal yields, whatever the weather with excellent low-light and temperature behavior.

ENDURING HIGH PERFORMANCE

Long-term yield security with Anti-PID Technology[1], Hot-Spot-Protect and Traceable Quality Tra.Q™.

LIGHT-WEIGHT QUALITY FRAME

High-tech aluminum alloy frame, certified for high snow (5400 Pa) and wind loads (2400 Pa).

A RELIABLE INVESTMENT

Inclusive 12-year product warranty and 25-year linear performance guarantee[2].

EUPD RESEARCH
TOP BRAND PV
MODULES
EUROPE
2015

Q CELLS
YIELD SECURITY
ANTI PID TECHNOLOGY (APT)
HOT-SPOT PROTECT (HSP)
TRACEABLE QUALITY (TRA.Q™)

Photon
Q CELLS
Best polycrystalline solar module 2013
Q.PRO-G2 235
151 modules tested

[1] APT test conditions: Cells at -1000 V against grounded, with conductive metal foil covered module surface, 25 °C, 168 h

[2] See data sheet on rear for further information.

THE IDEAL SOLUTION FOR:

Ground-mounted solar power plants

Engineered in **Germany**

Q CELLS

MECHANICAL SPECIFICATION

Format	78.5 in × 39.4 in × 1.38 in (including frame) (1994 mm × 1000 mm × 35 mm)
Weight	52.9 lb (24 kg)
Front Cover	0.13 in (3.2 mm) thermally pre-stressed glass with anti-reflection technology
Back Cover	Composite film
Frame	Anodised aluminum
Cell	6 × 12 Q.ANTUM solar cells
Junction box	3.35-4.13 in × 2.36-3.15 in × 0.59-0.67 in (85-105 mm × 60-80 mm × 15-17 mm), Protection class ≥ IP67, with bypass diodes
Cable	4 mm² Solar cable; (+) ≥ 47.24 in (1200 mm), (-) ≥ 47.24 in (1200 mm)
Connector	Amphenol H4 UTX, IP68

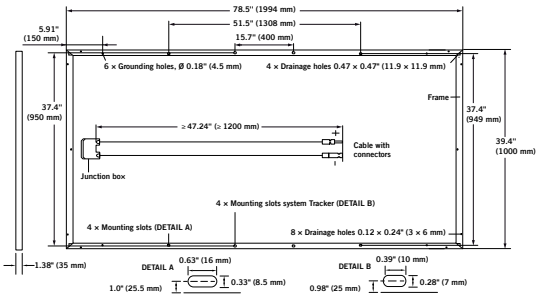

ELECTRICAL CHARACTERISTICS

POWER CLASS				330	335	340
MINIMUM PERFORMANCE AT STANDARD TEST CONDITIONS, STC[1] (POWER TOLERANCE +5 W / -0 W)						
Minimum	Power at MPP[2]	P_{MPP}	[W]	330	335	340
	Short Circuit Current*	I_{SC}	[A]	9.49	9.54	9.59
	Open Circuit Voltage*	V_{OC}	[V]	46.55	46.81	47.07
	Current at MPP*	I_{MPP}	[A]	8.91	8.97	9.03
	Voltage at MPP*	V_{MPP}	[V]	37.02	37.33	37.63
	Efficiency[2]	η	[%]	≥ 16.5	≥ 16.8	≥ 17.1
MINIMUM PERFORMANCE AT NORMAL OPERATING CONDITIONS, NOC[3]						
Minimum	Power at MPP[2]	P_{MPP}	[W]	244.7	248.4	252.1
	Short Circuit Current*	I_{SC}	[A]	7.65	7.69	7.73
	Open Circuit Voltage*	V_{OC}	[V]	43.44	43.68	43.92
	Current at MPP*	I_{MPP}	[A]	6.99	7.04	7.09
	Voltage at MPP*	V_{MPP}	[V]	35.01	35.29	35.56

[1] 1000 W/m², 25°C, spectrum AM 1.5 G [2] Measurement tolerances STC ± 3%; NOC ± 5% [3] 800 W/m², NOCT, spectrum AM 1.5 G * typical values, actual values may differ

Q CELLS PERFORMANCE WARRANTY

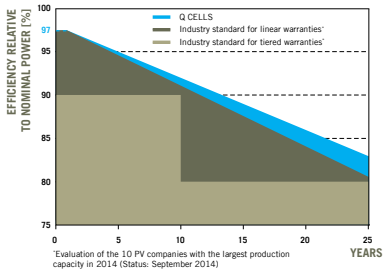

At least 97 % of nominal power during first year. Thereafter max. 0.6 % degradation per year.
At least 92 % of nominal power after 10 years.
At least 83 % of nominal power after 25 years.

All data within measurement tolerances. Full warranties in accordance with the warranty terms of the Q CELLS sales organisation of your respective country.

PERFORMANCE AT LOW IRRADIANCE

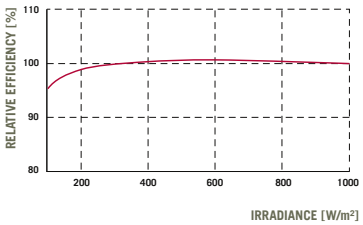

Typical module performance under low irradiance conditions in comparison to STC conditions (25 °C, 1000 W/m²).

TEMPERATURE COEFFICIENTS

Temperature Coefficient of I_{SC}	α	[%/K]	+0.04	**Temperature Coefficient of V_{OC}**	β	[%/K]	−0.29
Temperature Coefficient of P_{MPP}	γ	[%/K]	−0.40	**Normal Operating Cell Temperature**	NOCT	[°F]	113 ± 5.4 (45 ± 3 °C)

PROPERTIES FOR SYSTEM DESIGN

Maximum System Voltage V_{SYS}	[V]	1500 (IEC) / 1500 (UL)	**Safety Class**	II
Maximum Series Fuse Rating	[A DC]	15	**Fire Rating**	C / TYPE 1
Max Load (UL)[2]	[lbs/ft²]	75 (3600 Pa)	**Permitted module temperature on continuous duty**	-40 °F up to +185 °F (-40 °C up to +85 °C)
Load Rating (UL)[2]	[lbs/ft²]	33 (1600 Pa)	[2] see installation manual	

QUALIFICATIONS AND CERTIFICATES

IEC 61215 (Ed. 2); IEC 61730 (Ed. 1), Application class A
This data sheet complies with DIN EN 50380.

C Certified US
UL 1703
(254141)

PACKAGING INFORMATION

Number of Modules per Pallet	29
Number of Pallets per 40' Container	22
Pallet Dimensions (L × W × H)	81.3 × 45.3 × 46.9 in (2065 × 1150 × 1190 mm)
Pallet Weight	1671 lbs (758 kg)

NOTE: Installation instructions must be followed. See the installation and operating manual or contact our technical service department for further information on approved installation and use of this product.

Hanwha Q CELLS USA Corp.
300 Spectrum Center Drive, Suite 1250, Irvine, CA 92618, USA | TEL +1 949 748 59 96 | WEB www.q-cells.com

Engineered in **Germany**

Specifications subject to technical changes © **Hanwha Q CELLS** Q.PLUS L-G4.2_330-340_2015-09_Rev03_NA

Effective March 2014
Supersedes August 2013

Single-phase overhead transformers

General

Eaton's Cooper Power Systems manufactures a complete line of single-phase overhead-type distribution transformers. Single-phase transformers are available as conventional (5-167kVA), completely self-protected (CSP 5-75kVA), or MagneX™ interrupter-protected (5-167kVA) in a variety of ratings to meet or exceed the requirements of applicable ANSI® and NEMA® standards. Units designed per Rural Utilities Service (RUS) standards are also available.

CSP transformers have direct connected primary arresters, secondary circuit breakers, and internal primary voltage fuses. This eliminates the need for separately mounted protective devices and provides reduced installation costs.

The MagneX interrupter is an overcurrent protective device that protects distribution transformers from damaging overloads and secondary faults, and is also used for switching the transformer "on" or "off."

Transformers shown include, first and second, single-phase overhead conventional transformers, and third, MagneX interrupter-protected transformer.

Cooper Power Systems
by EATON

Standard features

- Meet or exceeds ANSI® and NEMA® standards
- Meets DOE Energy Efficiency Standard 10 CFR Part 431 for distribution transformers
- EPRI recommended interlaced core-type design (5-75 kVA)
- Tank coating exceeds IEEE Std C57.12.31™-2010 standard
- Cover with a minimum dielectric strength of 8 kV
- Tin-plated high and low-voltage bushing terminals to accommodate aluminum or copper conductors
- Laser-engraved nameplate
- Wet process porcelain high-voltage bushings resistant to high-voltage corona
- Tank grounding provisions
- Envirotemp™ FR3™ fluid or electrical grade mineral oil
- Heavy-duty lifting lugs and hanger brackets per ANSI® requirements1
- Visible cover ground on units with cover-mounted bushings
- Recessed tank bottom that offers protection when sliding over rough surfaces
- Automatic pressure relief device
- Polymer low-voltage bushings (5-75 kVA)
- Arrester mounting and grounding provisions
- Internal mark indicating the proper oil level
- Permanently stamped secondary leads to ensure proper identification
- Corrosion-resistant cover band
- Quality System ISO 9001 certified

Optional accessories

- Taps either two 2.5 % above and below; four 2.5% below; NEMA® taps or special taps
- Externally-operable tap changer switches for safe operation
- Multiple voltage primaries (5-75kVA)
- Externally-operable multiple voltage switches for safe operation
- High corrosion area protection with 304 or 409 stainless steel hardware and tanks
- MagneX™ interrupter
- Birdguards
- Envirotemp™ FR3™ fluid where less-flammable fluid is required and superior environmental characteristics are desired
- Cover with a minimum dielectric strength of 15 kV
- Extra creep high voltage bushings (up to 150 kV BIL)
- Porcelain low-voltage bushings
- Canadian Standards Association (CSA) conforming design
- Special designs conforming to international specifications
- Drain/sampling valve
- Pressure vacuum gauge (tank size limitations apply)
- Filter press connections
- Temperature gauge (tank size limitations apply)
- Liquid level gauge (tank size limitations apply)
- High efficiency transformers at 0.05% or higher above DOE efficiency

[1]Lugs and brackets per ANSI requirements up to 4500 lbs.

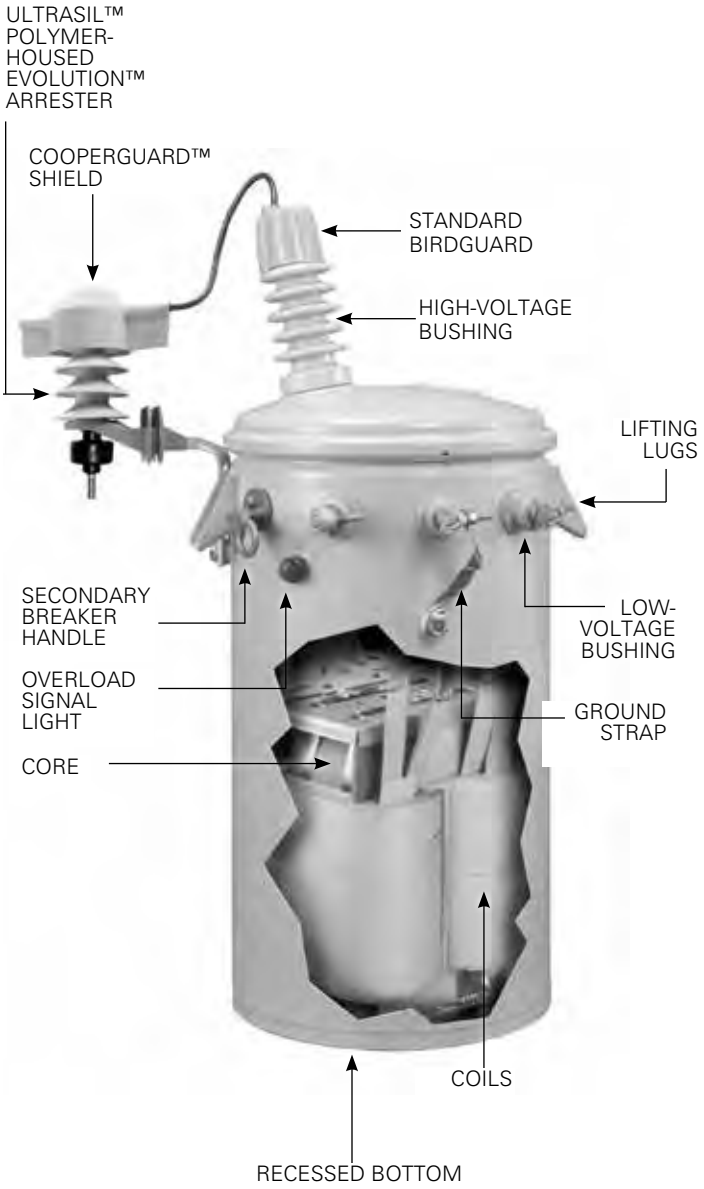

Figure 1. Single-phase overhead CSP transformer.

Single-phase overhead conventional

Product Scope:
kVA: 5-167
Primary Voltage: 2400-19,920 V
Secondary Voltage: 120-600 V

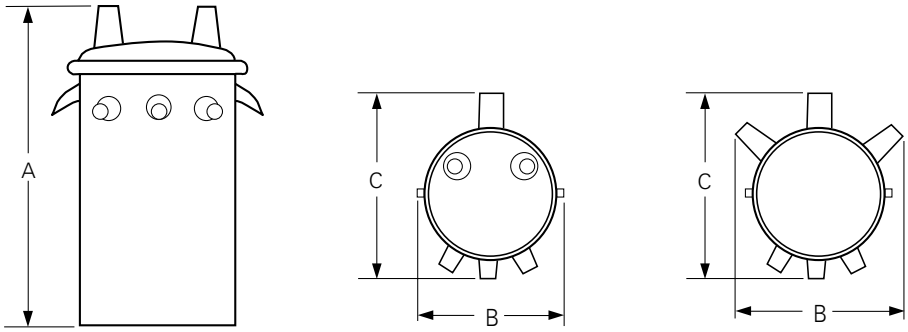

≥95 kV BIL ≤75 kV BIL[1]

Table 1. Typical dimensions and Weights[2,3]

	Dimensions (in.)							
	"A"				"B"			
kVA	≤75 kV BIL	95 kV BIL	125 kV BIL	150 kV BIL	≤75 kV BIL	≥95 kV BIL	"C"[1]	Approx. Weight (lbs.)
5	26	32	42	45	28[1]	17	20	220
10	26	32	42	45	28[1]	17	20	220
15	30	35	46	49	28[1]	17	20	280
25	31	38	48	51	30[1]	20	22	350
37.5	33	40	52	55	31[1]	20	24	450
50	36	44	52	55	33[1]	22	25	600
75	39	51	54	57	33[1]	24	28	820
100	40	55	58	61	33[1]	27	31	1100
167	47	55	58	61	35[1]	35	37	1400

[1] Includes sidewall mount H.V. bushings.
[2] Includes radiators.
[3] Weights, gallons of fluid and dimensions are for reference only, and not for construction. Please contact Eaton's Cooper Power Systems for exact dimensions.

Single-phase overhead completely self protected (CSP)

Product Scope:
kVA: 5-75
Primary Voltage: 2400-19,920 V
Secondary Voltage: 120-600V

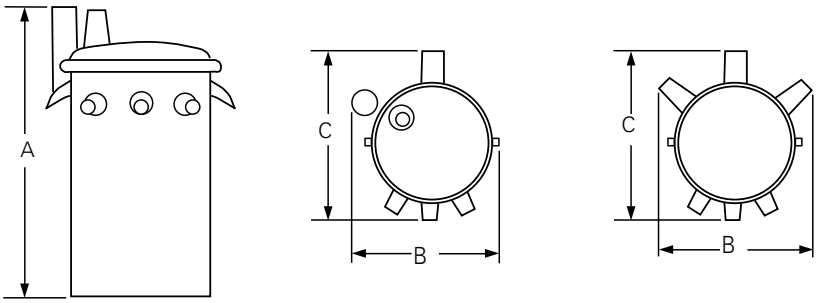

≥95 kV BIL ≤75 kV BIL[1]

Table 2. Typical Dimensions and Weights[2,3]

	Dimensions (in.)							
	"A"				"B"			
kVA	≤75 kV BIL	95 kV BIL	125 kV BIL	150 kV BIL	≤75 kV BIL	≥95 kV BIL	"C"1	Approx Weight (lbs.)
5	26	36	42	45	28[1]	17	20	240
10	26	36	42	45	28[1]	17	20	240
15	30	42	46	49	28[1]	17	20	300
25	31	44	48	51	30[1]	20	22	400
37.5	33	46	52	55	31[1]	20	25	500
50	36	46	52	55	33[1]	22	26	600
75	39	51	54	57	33[1]	24	30	900
100[4]	40	55	58	61	33[1]	27	34	1100
167[4]	47	55	58	61	35[1]	35	40	1600

[1] Includes sidewall mount H.V. bushings.
[2] Includes Radiators
[3] Weights, gallons of fluid and dimensions are for reference only, and not for construction. Please contact Eaton's Cooper Power Systems for exact dimensions.
[4] MagneX interrupter Only

Protection options

- High fire point Envirotemp™ FR3™ fluid for increased fire safety
- Secondary breaker with weak link for secondary fault and overload protection (5-75 kVA)
- Primary weak link fuse
- Current-limiting fuse for high interrupting ratings and limiting fault currents
- Low-voltage distribution class MOV arrester – internally or externally mounted
- MagneX interrupter (Primary Breaker) with isolation link
- MagneX interrupter (Primary Breaker) with partial range current-limiting fuse
- Lightning arresters for primary over-voltage protection: direct connected, normal or heavy duty metal oxide varistor (MOV) either internal (VariSTAR™), or external UltraSIL Polymer-Housed Evolution or UltraSIL™ Polymer-Housed VariSTAR arrester with polymer housing.

Quality control

Single-phase overhead-type transformers manufactured by Cooper Power Systems provide outstanding performance. All transformers from Cooper Power Systems pass tests as prescribed by ANSI® prior to shipment. Cores and coils are designed for high reliability and low field failure rates. The domed cover design in conjunction with the formed cover band provides increased pressure withstand capability, eliminates bushing overhang and improves cover retention. The high-voltage bushing design improves gasket protection and seal. The low-voltage polymer bushing virtually eliminates ultraviolet deterioration with its captured gasket, compression-limiting design. Transformers are designed and manufactured to be corrosion-resistant. Special attention is given to all welded external parts, to avoid moisture entrapment that can lead to corrosion problems. The recessed bottom design, as well as the stainless steel cover band ends, provide corrosion protection in areas that are more susceptible to coating damage during handling. All coating systems exceed IEEE Std C57.12.31™-2010 standard.

The Quality System at Eaton's Cooper Power Systems Transformer Products is ISO 9001 certified.

Fluid options

Transformers can be filled with standard electrical grade mineral insulating oil, Envirotemp™ FR3™ fluid, or other dielectric coolants.

For fire-sensitive locations, Envirotemp™ FR3™ fluid, a fire resistant natural ester-based fluid is recommended. Envirotemp™ FR3™ fluid also offers the benefits of a soy oil-based dielectric coolant that is sustainable and has unique environmental and material properties in addition to increased fire safety over conventional mineral oil.

Check with Eaton's Cooper Power Systems for the availability of other dielectric coolants in single-phase, pad-mounted transformers.

Eaton
1000 Eaton Boulevard
Cleveland, OH 44122
United States
Eaton.com

Eaton's Cooper Power Systems Business
2300 Badger Drive
Waukesha, WI 53188
United States
Cooperpower.com

© 2014 Eaton
All Rights Reserved
Printed in USA
Publication No. 201-10

Eaton, Cooper Power Systems, MagneX, VariSTAR, UltraSIL, Evolution, and CooperGuard are trademarks of Eaton in the U.S. and other countries. You are not permitted to use these trademarks without the prior written consent of Eaton.
IEEE Std. C57.12.31™-2010 standard is a trademark of the Institute of Electrical and Electronics Engineers, Inc., (IEEE). This product is not endorsed or approved by the IEEE.
Envirotemp™ and FR3™ are licensed trademarks of Cargill, Incorporated.
NEMA® is a registered trademark of the National Electrical Manufacturers Association.
ANSI® is a registered trademark of the American National Standards Institute.

Powering Business Worldwide

For Eaton's Cooper Power Systems single-phase overhead transformer product information call 1-877-277-4636 or visit: www.cooperpower.com.

Solidlock®

Fixed Knot

Are you looking for an agricultural fence that's strong, virtually maintenance free, and comes in sizes suited for practically all animals and applications?

Look no further than Solidlock.

Our fixed knot design combined with high tensile wire makes Solidlock the strongest woven wire fence you can buy. This design locks the line wire and stay wire together, giving you the strength you require. Plus Solidlock's use of high tensile wire and solid vertical stays means next to no maintenance. You can spend less time worrying about your fence - whether you want to keep animals in or out.

There's a Solidlock fence option to fit virtually any application you require. Our fence is available in varieties ranging from 42 inches to 120 inches tall. We have larger staggered openings or smaller 3 x 3 inch openings for horse applications.

Solidlock fence is available in Class 3 (heavy coat) galvanized for long life. You can also get Solidlock with Bezinal + Paint advanced coating. Choose either a black or green finish and enjoy the benefits of a product that will last four to six times longer than a standard Class 1 fence.

Solidlock Game
available in 6" and 12" stay

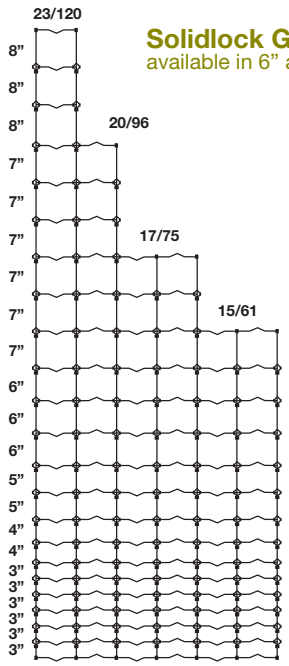

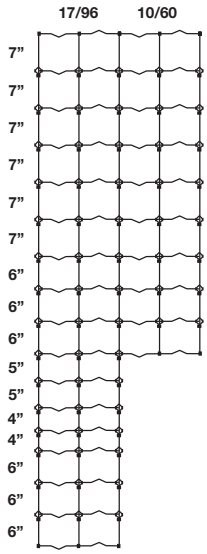

Solidlock Cattle
available in 6" and 12" stay

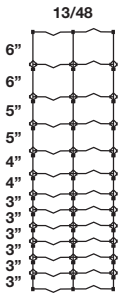

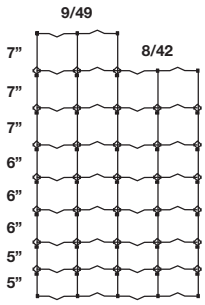

Solidlock Horse
available in 3" stay

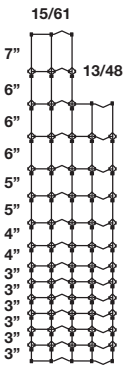

BEKAERT

Solidlock 12.5g Game Fence

Part Number	Fence Design	Height	Vertical Stay Spacing	Roll Length	Top and Bottom Wire Diameter	Main Wire Diameter	Roll Weight	Finish
118218	1060 – 6	60”	6”	330’	12.5g	12.5g	210 lbs	Class 3
118257	1060 – 12	60”	12”	660’	12.5g	12.5g	294 lbs	Class 3
118248	1561 – 6	61”	6”	330’	12.5g	12.5g	279 lbs	Class 3
118269	1775 – 6	75”	6”	330’	12.5g	12.5g	327 lbs	Class 3
118229	1775 – 12	75”	12”	330’	12.5g	12.5g	236 lbs	Class 3
118280	1796 – 6	96”	6”	330’	12.5g	12.5g	355 lbs	Class 3
118271	2096 – 3	96”	3”	165’	12.5g	12.5g	340 lbs	Class 3
118288	2096 – 6	96”	6”	330’	12.5g	12.5g	396 lbs	Class 3
118376	2096 – 6	96”	6”	500’	12.5g	12.5g	601 lbs	Class 3
118241	2096 – 12	96”	12”	330’	12.5g	12.5g	264 lbs	Class 3
118371	2096 – 12	96”	12”	660’	12.5g	12.5g	564 lbs	Class 3
118318	23120 – 6	120”	6”	330’	12.5g	12.5g	492 lbs	Class 3
136692	2096 – 6	96”	6”	330’	12.5g	12.5g	396 lbs	Green
136261	2096 – 6	96”	6”	330’	12.5g	12.5g	396 lbs	Black

Solidlock 12.5g Cattle Fence

Part Number	Fence Design	Height	Vertical Stay Spacing	Roll Length	Top and Bottom Wire Diameter	Main Wire Diameter	Roll Weight	Finish
118185	842 - 6	42”	6”	330’	12.5g	12.5g	157 lbs	Class 3
118144	842 - 12	42”	12”	330’	12.5g	12.5g	110 lbs	Class 3
118221	842 - 12	42”	12”	660’	12.5g	12.5g	220 lbs	Class 3
118199	949 - 6	49”	6”	330’	12.5g	12.5g	182 lbs	Class 3
118162	949 - 12	49”	12”	330’	12.5g	12.5g	129 lbs	Class 3
118239	949 - 12	49”	12”	660’	12.5g	12.5g	257 lbs	Class 3
118226	1348 - 6	48”	6”	330’	12.5g	12.5g	234 lbs	Class 3
118310	1348 - 12	48”	12”	330’	12.5g	12.5g	176 lbs	Class 3

Solidlock 12.5g Horse Fence

Part Number	Fence Design	Height	Vertical Stay Spacing	Roll Length	Top and Bottom Wire Diameter	Main Wire Diameter	Roll Weight	Finish
118150	1348 - 3	48”	3”	100’	12.5g	12.5g	117 lbs	Class 3
118225	1348 - 3	48”	3”	200’	12.5g	12.5g	233 lbs	Class 3
118174	1561 - 3	61”	3”	100’	12.5g	12.5g	140 lbs	Class 3
118249	1561 - 3	61”	3”	200’	12.5g	12.5g	280 lbs	Class 3

Solidlock 14g Sheep & Goat Fence

Part Number	Fence Design	Height	Vertical Stay Spacing	Roll Length	Top and Bottom Wire Diameter	Main Wire Diameter	Roll Weight	Finish
141324	1048 - 3	48”	3”	165’	12.5g	14g	109 lbs	Class 3
137452	1048 - 12	48”	12”	330’	12.5g	14g	105 lbs	Class 3
137453	1048 - 12	48”	12”	660’	12.5g	14g	210 lbs	Class 3

Exhibit ORS-RV-4

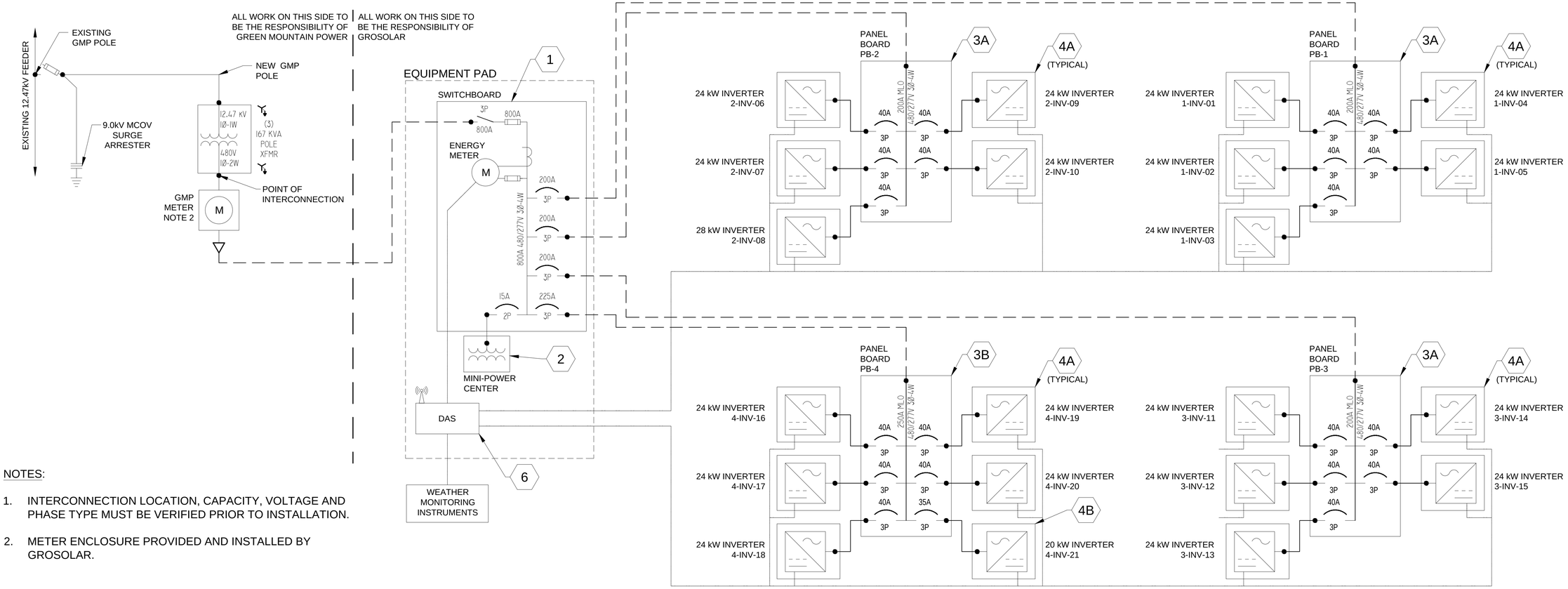

NOTES:

1. INTERCONNECTION LOCATION, CAPACITY, VOLTAGE AND PHASE TYPE MUST BE VERIFIED PRIOR TO INSTALLATION.
2. METER ENCLOSURE PROVIDED AND INSTALLED BY GROSOLAR.

EQUIPMENT AND MATERIALS SCHEDULE (THIS SHEET)

ITEM	QTY	DESCRIPTION
1	1	SWITCH BOARD, 480/277V 3Ø-4W 800A BUS, NEMA 3R ENCLOSURE, WITH INTEGRATED 800A FUSED DISCONNECT WITH MECHANICAL POSITION INDICATOR, INTEGRATED REVENUE GRADE ENERGY METER, (1) 15A 2 POLE , (3) 200A 3 POLE AND (1) 225A 3 POLE CIRCUIT BREAKERS.
2	1	MINI POWER CENTER, 5kVA, 480VAC:120/240VAC IN NEMA 3R ENCLOSURE
3A	3	PANEL BOARD, MLO 200A BUS, 480/277V 3Ø-4W, NEMA 3R ENCLOSURE, WITH (5) 40A 3 POLE CIRCUIT BREAKERS.
3B	1	PANEL BOARD, MLO 250A BUS, 480/277V 3Ø-4W, NEMA 3R ENCLOSURE, WITH (5) 40A 3 POLE AND (1) 35A 3 POLE CIRCUIT BREAKERS.
4A	20	24kW INVERTER, 1000VDC INPUT, 480VAC 3-PHASE OUTPUT, FRONIUS SYMO 24-3 480, 28.9A MAX CONTINUOUS OUTPUT CURRENT
4B	1	20kW INVERTER, 1000VDC INPUT, 480VAC 3-PHASE OUTPUT, FRONIUS SYMO 20-3 480, 24.1A MAX CONTINUOUS OUTPUT CURRENT
5	2250	PV MODULE, 330W, HANWHA Q.PLUS L-G4.2 330 OR SIMILAR
6	1	DAS SYSTEM, CONFIGURED TO MONITOR ALL INVERTERS, ENERGY METER AND WEATHER INSTRUMENTS, WITH CELL MODEM FOR OFF-SITE COMMUNICATIONS

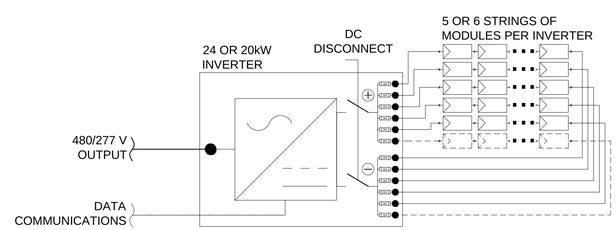

TYPICAL INVERTER CONFIGURATION

PV SYSTEM SUMMARY

MODULES PER STRING	18	MODULES
TOTAL NUMBER OF STRINGS	125	STRINGS
TOTAL QTY MODULES	2250	MODULES
TOTAL DC CAPACITY	742.5	kWDC
TOTAL INVERTER CAPACITY	500.0	kWAC

ISSUED FOR INTERCONNECTION APPLICATION
NOT FOR CONSTRUCTION

REV	DESCRIPTION	DATE	CHK BY	APV BY
C	REVISED DESIGN AND ISSUED FOR REVIEW	06-15-2016		
B	ISSUED FOR INTERCONNECTION	08-05-2015		
A	ISSUED FOR REVIEW	08-05-2015		

REVISIONS

PROJECT: MIDDLETOWN SPRINGS ORCHARD ROAD

LOCATION: 30 ORCHARD ROAD MIDDLETOWN SPRINGS, VT

groSolar™
205 BILLINGS FARM ROAD, BUILDING 4
WHITE RIVER JUNCTION, VERMONT 05001
800-374-4494
INFO@GROSOLAR.COM

THIS DRAWING AND SPECIFICATIONS CONTAINED HEREON IS PROPRIETARY TO GROSOLAR AND IS LOANED TO FACILITATE BIDDING, CONSTRUCTION, FABRICATION AND/OR EXECUTION OF REQUIREMENTS STATED AND IS TO BE SURRENDERED UPON REQUEST OR COMPLETION OF SERVICES

TITLE: ONE LINE DIAGRAM

SIZE: D | PROJECT NUMBER: TBD | DRAWING NUMBER: E-2 | REV: C

DRAWN BY: AP | ENGINEERED BY: AP | DATE: 06-15-2016

SCALE: NONE | SHEET: 1 OF 1

Exhibit ORS-RV-5

May 11, 2016

By Certified Mail; Return Receipt Requested

TO: Persons and Entities Entitled to Notice Pursuant to Public Service Board Rules

Re: Proposed Project – Orchard Road Solar I, LLC
45-Day Notice Letter of Petition to be filed under Section 248 with the Vermont Public Service Board

Dear Interested Persons and Entities:

Orchard Road Solar, LLC is in the planning stages of a solar project in Middletown Springs. We believe this project will be beneficial to the community and will help Vermont achieve its renewable energy goals. Orchard Road Solar, LLC is committed to providing clear and accurate information about the project.

You are receiving this letter because you are entitled under 30 V.S.A. §§ 219(a) and 248 and Vermont Public Service Board ("PSB" or "Board") Rule 5.110(C) to receive 45-day notice that Orchard Road Solar I, LLC ("Orchard Road Solar") plans to submit a petition to the PSB for a proposed approximately 500 kilowatt (kW AC) solar project. The Project will be sited on part of a former commercial apple orchard at approximately 30 Orchard Road in Middletown Springs, VT on land to be leased by Orchard Road Solar I, LLC. Global Resource Options, Inc. (d/b/a groSolar), headquartered in White River Junction, Vermont, is developing the Project in conjunction with Orchard Road Solar I, LLC.

An initial 45-day notice letter regarding the Orchard Road Solar Project was sent out on March 30, 2016. This letter is substantially the same but contains some additional details regarding the site location and some recipients/mailing addresses have been changed or updated. Orchard Road Solar intends to file a formal application with the PSB in June 2016.

1. Introduction

Orchard Road Solar intends to seek a Certificate of Public Good ("CPG") from the PSB to install and operate an approximately 500 kW +/- (AC) solar electric generation facility, to be known as the Orchard Road Solar Project (the "Project") in Middletown Springs, Vermont. The Project would be sited on approximately 5-acres of land to be leased from a larger approximately 126-acre parcel. The array is expected to produce approximately 865,000 kilowatt hours (kWh) of electrical energy per year, enough to power the equivalent of over 109 Vermont homes. Power from the facility will be fed into the Green Mountain Power (GMP) electric grid and provide a net metered resource for qualified GMP customers.

This letter briefly describes Orchard Road Solar's plans for the construction and operation of the Project, including (1) Project site equipment and construction plans; (2) the expected benefits of the Project; (3) the preliminary assessment of aesthetic and environmental impacts of the Project; (4) the consideration of on-site alternatives; (5) the expected date a Section 219a petition will be filed with the PSB; and (6) the rights of recipients of this notice to comment on the Project plans in accordance with PSB Rule 5.110(C). The following attachments are included with this letter:

Attachment A – Location Map
Attachment B – Project Site Plan
Attachment C – Solar Array Equipment Specifications
Attachment D – List of Adjoining Landowners

2. 30 V.S.A. § 219a Application and Notice

The state permitting process for net metering for projects of this size requires an applicant for a Section 248 CPG to provide notice to certain entities and persons 45-days prior to filing the formal application with the PSB. Those entities and persons include:

- The legislative bodies and municipal and regional planning commissions in the communities where the project will be located;
- The Secretary of the Agency of Natural Resources;
- The Commissioner of the Department of Public Service and its Director for Public Advocacy;
- The landowners of record of property adjoining the project sites;
- The Public Service Board; and
- The serving electric company.

Per PSB Rule 5.110(C), recipients of this 45-Day Notice letter may file inquiries or comments with the applicant with respect to the Project.

Please send all inquiries or comments during this 45-day notice period to groSolar, a company that is assisting Applicant Orchard Road Solar with the Project:

Peter Bay
Global Resource Options, Inc. (groSolar)
205 Billings Farm Road
Building 4
White River Junction VT 05001
Peter.bay@grosolar.com
802-272-6519

Recipients of this notice will also have the opportunity to file comments with the PSB once an application is filed. This comment period will last for 21 days from the date an application is filed with the PSB, which is expected to be no sooner than June 2016.

The municipal and regional planning commissions, municipal select board, the Agency of Natural Resources, the Department of Public Service, and Green Mountain Power ("GMP") will receive a copy of the Applicant's application when it is filed with the PSB, which will contain all information as required by PSB Rule 5.100. Notice of the filed application shall be provided to the adjoining property owners and the Town of Middletown Springs Town Clerk.

3. Project Site, Equipment, and Construction Plans

Site Characteristics

The proposed project will be sited on approximately 5 acres of land that is being leased from a larger existing tract of land (approximately 126 acres). The lease area, which is set back approximately 150 feet from Wescott Road and approximately 320 feet from Orchard Road, will accommodate the solar array and will include a 50-foot buffer between the array structures and adjacent property boundaries. There is a residential structure along with a barn on the northern portion of the 126-acre parcel, separated from the Project area by Wescott Road and Orchard Road. The nearest offsite residential structure from the Project lies approximately 400 feet to the West of the Project. The next nearest residence is on the adjoining parcel to the southeast, approximately 1,000 feet away or more. There are no residences in the general vicinity to the east of the Project. The proposed solar array will be accessed via an existing access drive from the Wescott Road which will be extended into the Project area. A Site Location Map is provided as Attachment A.

Orchard Road Solar chose this location to develop a solar project based upon GIS-based site assessment criteria that included a preliminary analysis of existing site characteristics, exposure to sunlight, minimal aesthetic and environmental impacts, and proximity to the three-phase power grid. The Project Site Plan, provided in Attachment B, shows the proposed locations for the solar arrays and site access.

The Project's site plan was designed to meet the following objectives: 1) minimize the Project footprint while maintaining the economic viability of the solar electric generation facility; 2) maintain appropriate separation or screening from surrounding land uses; 3) minimize shading of the solar panels; and 4) minimize impacts to environmental resources including wetlands and sensitive natural communities. The solar array area will be located on a portion of the property which consists primarily of open field. Minimal tree clearing will need to occur within the Project area and selective tree-cutting may be required to the south of the Project area.[1]

Solar Panels and Racking System

Orchard Road Solar intends to use approximately 2,268 (+/-) ground-mounted solar panels in the solar array, as shown in Attachments B and C. The final decision on which panels to use for the Project will be made prior to initiating the construction phase of the Project, and will be based upon market and engineering considerations. The layout and characteristics of the Project are not

[1] A final layout will be included with Orchard Road Solar's Section 219a Application. Any variations between the attached site plan and the final plan are not expected to be substantial.

expected to materially change, as the panels will be very similar to the panels shown in Attachment C.

The individual solar panels that comprise the array will be mounted on a fixed tilt racking system. The racks will sit upon either steel poles driven into the ground or "earth screws" that are similarly screwed into the ground. This minimizes disturbance to the soil and vegetation at the site. The support structures will hold the solar panels at approximately three feet above the ground, allowing snow to slide off the panels and pile up without compromising energy production. At their highest point, the solar panels will sit approximately nine feet above the ground.

Racks for the fixed tilt system will be oriented east-west and hold the panels at a fixed angle of approximately 30 degrees this is shown on the Site Plan in Attachment B.

The arrays will be connected to 3-phase string inverters, which will in turn be connected to the panel board and transformers via electrical cable within conduit. The transformers will be pole mounted in an area immediately west of the solar array.

Project Interconnection, Inverters and Transformers

The Project will interconnect with the Green Mountain Power electric grid at the Project entrance off of Wescott Road. There is an existing three-phase distribution power line along Route 140, north of the Project. From there, an existing single-phase power line will be upgraded to three-phase power running south along Orchard Road and then west along Wescott Road to the Project. The existing power poles from Route 140 to the Project are ageing and will also be replaced as part of the Project. The interconnection route and proposed upgrades are shown in the Project Site Plan, Attachment B.

We currently anticipate using string inverters. The string inverters are small inverters that hang discretely on the backside of the racking system underneath the solar panels, converting the DC current generated by the solar panels into AC current. The inverters will be connected to three (167 kVa) pole-mounted transformers. The transformer will use a non-toxic, biodegradable cooling oil. The transformer will step up the inverter output to distribution voltage for interconnection to GMP's distribution circuit. The electrical interconnect lines will run from the transformer to the proposed interconnection point shown on Attachment B.

The solar array and additional equipment will be surrounded by a minimum 7' wire knot fence, which is consistent with fencing at other Vermont solar projects and satisfies the National Electrical Code and the National Electric Safety Code.

Construction and Operation

Project construction is expected to take approximately 12 weeks. The general sequence of construction will be as follows:

Phase I: Clearing and any grading required of the Project area for panel and equipment installation and to reduce shading; construction of the access drives as needed.

Phase II: Construction of the array and support structures.
Phase III: Installation of the solar modules, placement of the string inverters, and wiring to the transformers. Following completion of these activities, the system will be tested and commissioned for operation.

The Project incorporates low-impact design characteristics including:

- Impervious new surfaces will be limited to equipment pads and construction of gravel access roads into the site, as necessary.

- Native soils will remain in place. The areas beneath and around the arrays will remain vegetated, although the land inside and around the perimeter of the fence will be periodically mowed.

- Tree clearing and pruning will be the minimum needed to avoid shading of the solar panels. Following clearing, most stumps will be left in places where no structures will be installed.

Following construction, daily access to the array is not necessary. The solar array production will be monitored remotely, with technicians visiting the site on only an as-needed basis.

Site Access and Equipment Delivery

The Project site will be accessed via a proposed approximately 12' wide gravel access drive off of Wescott Road, which will be extended into the Project area, as shown in Attachment B. No other new roads are required for Project site access.

The solar panels and rack components will be shipped on pallets, typically delivered by standard tractor-trailer truck. We expect approximately 9 (+/-) truckloads will be needed to deliver the solar panels and racks over a 6-week period. All other equipment and material including wire, cable, conduit, etc., will be transported to the site utilizing standard delivery trucks.

The construction equipment that we intend to utilize to install the solar array will likely include a light duty All Terrain Lull or similar equipment to lift the panels into place, a tire or track-mounted excavator for driving the rack foundation posts, and excavation equipment as needed to install an equipment pad.

4. Project Benefits

In addition to providing long-term stable electricity rates for offtakers of the Project's energy, the Project will benefit the Vermont economy in other ways. Orchard Road Solar I, LLC will pay municipal and education taxes, employ Vermont consultants for development work, and when commercially feasible, purchase Project equipment from Vermont companies, employing local businesses for construction and installation work.

5. Preliminary Impact Assessment

We have utilized a team of environmental and energy consultants who have substantial experience with projects of this type. Based upon their assessment of conditions at the site, the Project will be designed so that it will not cause undue adverse impacts to aesthetics, environmental resources, or public health and safety.

Orchard Road Solar has performed a preliminary visual assessment of the proposed 5-acre Project area. The proposed array will be set back approximately 150 feet from Wescott Road, from which it is visible. There are a number of trees and shrubs that exist along Wescott Road which will remain in place and contribute to mitigating views into the Project from Wescott Road. Most of the surrounding area is farmland, with two residences nearby on the southeastern Project border, the closest of which is a little over 1,000 feet away. There is also a residence approximately 400 feet away to the west of the project which is partially screened by existing vegetation.

Orchard Road Solar has identified no wetlands in or abutting the project area which has been confirmed by the Vermont Department of Environmental Conservation's Wetlands Program office. Orchard Road Solar has also consulted with the Vermont Department of Fish and Wildlife on the presence of any rare, threatened, or endangered species in the Project vicinity, and will follow their recommendations for necessary follow-up surveys or inventory. The Project will not disturb any prime agricultural soils.

To avoid and minimize environmental impacts, the Project has been designed as follows:

- Solar array support structures will be pile-driven steel to eliminate the need for concrete footings and foundation excavation to the fullest extent possible.
- Clearing of forest vegetation will be limited to that needed to reduce shading on the arrays and stumps will be left where possible.
- No undue adverse impact will result on the quality of wildlife habitat; no deer wintering habitat is identified in this area.

An Operational Stormwater Permit may be required for the Project if the total amount of impervious surface proposed is over the jurisdictional threshold of one acre. The current design is intended to minimize impervious surface proposed, which will most likely fall below the one-acre threshold in final design. A Construction General Permit will be obtained if more than one acre of earth disturbance is anticipated. During construction, stormwater management practices will be implemented in accordance with ANR guidelines.

The Project will meet the safety standards of the National Electrical Code and utility interconnection standards for safe and reliable operation of solar electric plants.

Electrical – System Impact Study

A Fast Track Study has been completed by GMP. The Project will connect to an extended three-phase line to the north side of the Project connecting alongside Wescott Road. Green Mountain Power will be replacing the utility poles along Orchard Road from Route 140 up to the Project due to the age of the power poles, approximately 2,400 feet. While making these replacements, Green Mountain Power will proceed to upgrade the service from single-phase to three-phase power. The Project will be responsible for the costs of the three-phase service upgrade, along with one utility pole at the intersection of Orchard Road and Wescott Road and approximately three utility poles along Wescott Road.

Aesthetics

Prior to proceeding with development of the Project, groSolar meticulously reviewed the Project from an aesthetics point of view, carefully selecting a site that will not have an "undue" adverse effect on aesthetics and scenic or natural beauty. The site and surrounding landscape lend itself to effective mitigation measures such as landscaping, context-appropriate fencing and transformer screening. Generally, the hillside on Orchard Road, as well as the low profile of the solar arrays, will help reduce project visibility from northern vantage points toward the array. The closest residence is located approximately 400 feet away from the Project and, in most cases, views of the array are screened by existing vegetation along the southern, western, and eastern borders. The existing vegetation helps mitigate any potential views nearby residences may have of the Project. A full aesthetics analysis will be included with the Section 248 Petition for a CPG.

The projected sound levels produced by the Project will meet noise guidelines/standards adopted by the US Environmental Protection Agency, the World Health Organization, and the Public Service Board. A noise analysis will be conducted for filing the full petition, but the generally low sound level is likely to be the same or lower than daytime background levels in the area.

On-Site Alternatives

The site for the Project was carefully selected based upon a multi-criteria assessment that evaluated the presence of hydric and prime agricultural soils, and the site's proximity to floodways, wetlands, and other water corridors. A site on the east side of Orchard Road, adjacent to this parcel of land, was first reviewed for the Project, but impacts to wetland were determined to be above an acceptable threshold, and the current site was selected instead, particularly because of the lack of wetlands. After the site was chosen, environmental and other consultants reviewed various configurations within the parcel in order to minimize and avoid environmental, aesthetic, and other unwanted impacts while maximizing the solar energy output. As a result, Orchard Road Solar proposes a configuration that utilizes a low-impact mounting system and locates the solar array to avoid sensitive environmental resources.

6. Expected Petition Filing Date with Vermont Public Service Board

Orchard Road Solar intends to file an Application for a CPG and supporting materials with the PSB soon after the 45-day notice period expires, estimated in late June 2016. Once the Application is filed, Orchard Road Solar expects that a decision would be rendered by mid-summer 2016 for a construction start soon thereafter.

7. Conclusion

Thank you for your attention to this matter. We look forward to progressing through the Section 219a process and welcome your input and suggestions to make this a successful Project.

Sincerely,

Orchard Road Solar I, LLC

By:

/Rod Viens/ VMW

Rod Viens
Executive Vice President

Prepared By:

SE GROUP

SCALE (ft)

0 800 1600

groSolar | Orchard Road Solar - Middletown Springs , VT

CONTEXT/VIEWSHED PLAN | Figure 1

March 21, 2016

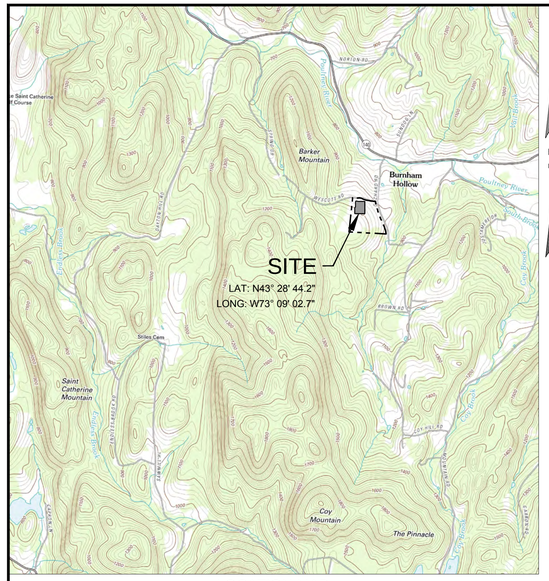

LOCATION MAP

SCALE: 1" = 1/2 Mile

PROPOSED ARRAY

SHADING TIME USED FOR ROW TO ROW SPACING	10AM TO 2PM DECEMBER 21
ARRAY TILT	30°
MODULE MODEL	330W
NUMBER OF RACKS	126
MODULES PER RACK	18
MODULES DEPLOYED	2,268
AC CAPACITY (kWAC)	500.00
DC/AC RATIO	1.50

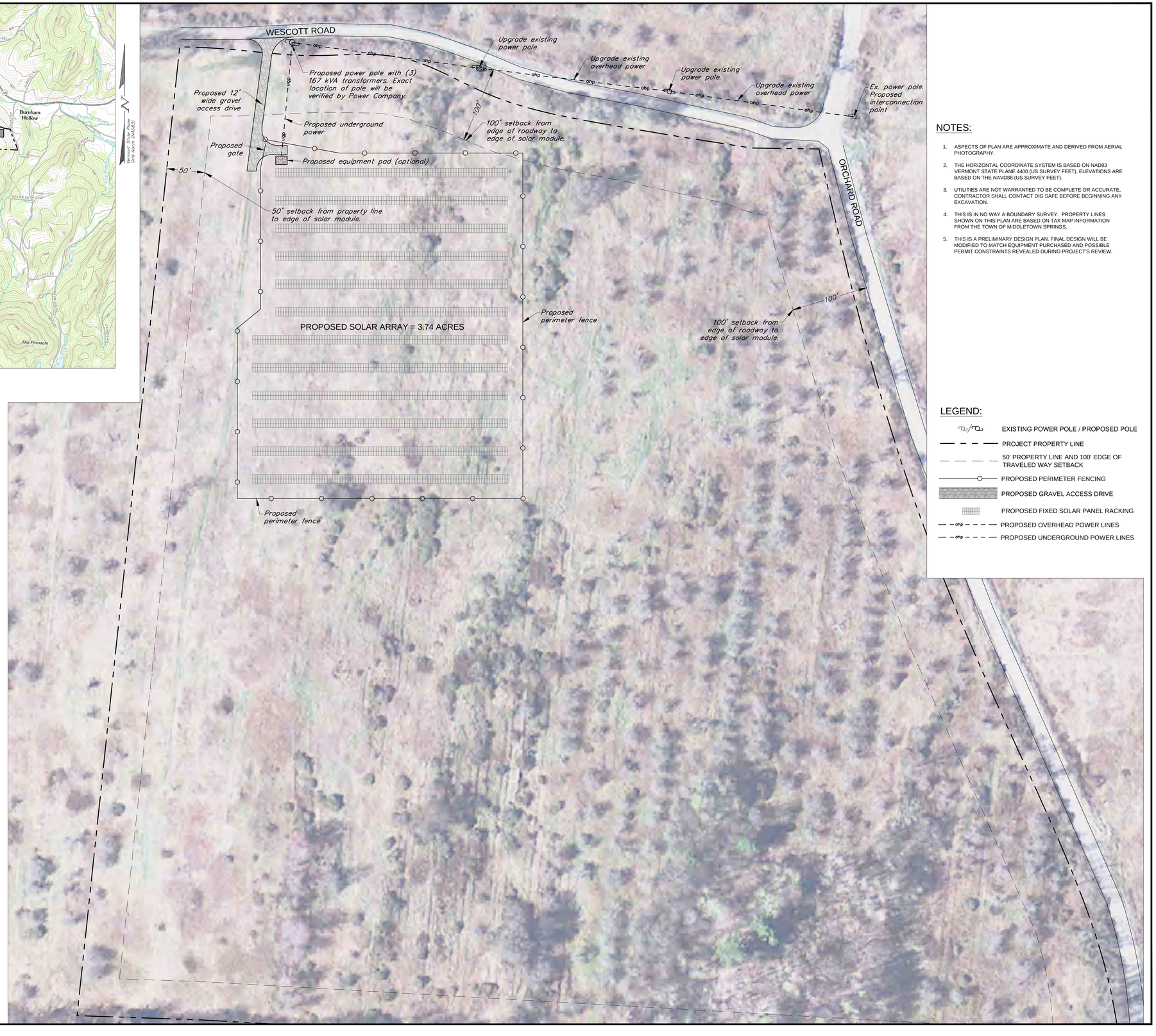

NOTES:

1. ASPECTS OF PLAN ARE APPROXIMATE AND DERIVED FROM AERIAL PHOTOGRAPHY.
2. THE HORIZONTAL COORDINATE SYSTEM IS BASED ON NAD83 VERMONT STATE PLANE 4400 (US SURVEY FEET). ELEVATIONS ARE BASED ON THE NAVD88 (US SURVEY FEET).
3. UTILITIES ARE NOT WARRANTED TO BE COMPLETE OR ACCURATE, CONTRACTOR SHALL CONTACT DIG SAFE BEFORE BEGINNING ANY EXCAVATION.
4. THIS IS IN NO WAY A BOUNDARY SURVEY. PROPERTY LINES SHOWN ON THIS PLAN ARE BASED ON TAX MAP INFORMATION FROM THE TOWN OF MIDDLETOWN SPRINGS.
5. THIS IS A PRELIMINARY DESIGN PLAN. FINAL DESIGN WILL BE MODIFIED TO MATCH EQUIPMENT PURCHASED AND POSSIBLE PERMIT CONSTRAINTS REVEALED DURING PROJECT'S REVIEW.

LEGEND:

- EXISTING POWER POLE / PROPOSED POLE
- PROJECT PROPERTY LINE
- 50' PROPERTY LINE AND 100' EDGE OF TRAVELED WAY SETBACK
- PROPOSED PERIMETER FENCING
- PROPOSED GRAVEL ACCESS DRIVE
- PROPOSED FIXED SOLAR PANEL RACKING
- PROPOSED OVERHEAD POWER LINES
- PROPOSED UNDERGROUND POWER LINES

ORCHARD ROAD SOLAR

30 Orchard Road
Middletown Springs, Vermont

groSolar
205 Billings Farm Road, Building 4
White River Junction, VT 05001
www.grosolar.com

Krebs & Lansing Consulting Engineers, Inc.
164 Main Street, Suite 201
Colchester, VT 05446
T: (802) 878-0375
F: (802) 878-9618
email@krebsandlansing.com
KrebsandLansing.com

ISSUED FOR PERMIT REVIEW
NOT FOR CONSTRUCTION

SOURCE DATA LEGEND

MAPPING SOURCE DATA USED FOR PLAN COMPILATION

Civil Engineering:

Krebs and Lansing Consulting Engineers, Inc.
164 Main Street, Suite. 201
Colchester, Vermont 05446

Enivronmental:

Arrowwood Environmental
950 Bert White Road
Huntington, Vermont 05462

0' 30' 60' 120' 180'

GRAPHIC SCALE 1" = 60'

Proposed
Solar Array

SET REV.	REVISIONS/COMMENTS	DATE

Drawing Title:

45-DAY
SITE PLAN

DATE of Issue: 02/19/16

Drawn by: SDG | Checked by: GTD

Project No.: 16123 | Scale: 1" = 60'

Drawing No.: C-100 | Rev No.:

/ Perfect Welding / Solar Energy / Perfect Charging

SHIFTING THE LIMITS

FRONIUS SYMO

/ Powering commercial projects that last. The Fronius Symo.

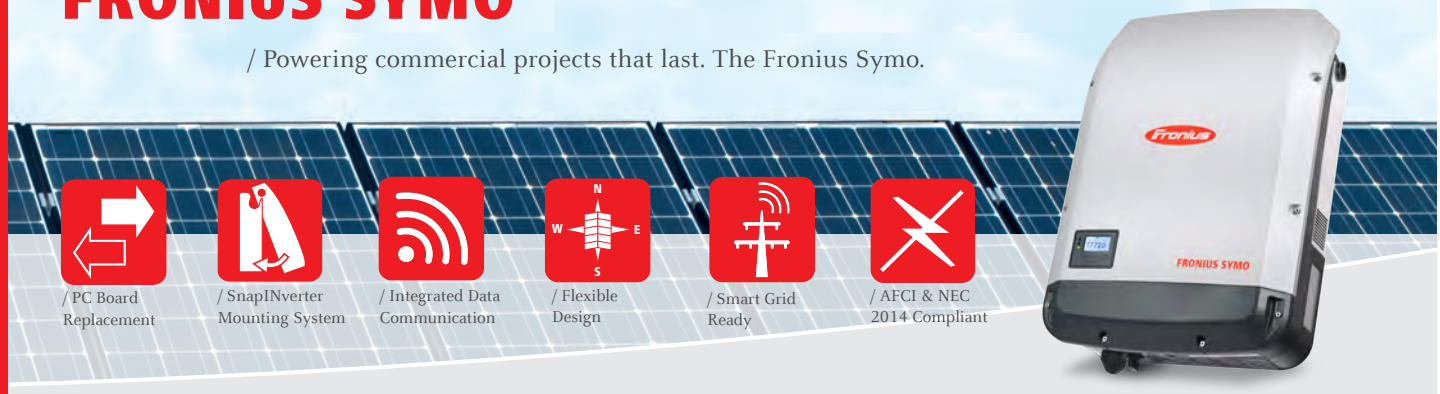

/ PC Board Replacement

/ SnapINverter Mounting System

/ Integrated Data Communication

/ Flexible Design

/ Smart Grid Ready

/ AFCI & NEC 2014 Compliant

/ Featuring ten models ranging from 10 kW to 24 kW, the transformerless Fronius Symo is the ideal compact three-phase inverter for all commercial applications. The high system voltage and wide input range ensure maximum flexibility in system design. With low roof loading, NEMA 4X and 1000 V DC rating, the Fronius Symo can be mounted in many different ways, including flat on a roof or on a pole. The modern design is equipped with the SnapINverter mounting system, allowing for lightweight, secure and convenient installation. Several industry-leading features are available with the Fronius Symo including Wi-Fi®* and SunSpec Modbus interfaces for seamless monitoring and data-logging, field proven Arc Fault Circuit Interruption (AFCI), NEC 2014 compliant, and Fronius' superb online and mobile monitoring platform Fronius Solar.web.

TECHNICAL DATA FRONIUS SYMO (10.0-3 208-240, 12.0-3 208-240, 10.0-3 480, 12.5-3 480, 15.0-3 208)

INPUT DATA		SYMO 10.0-3 208-240	SYMO 12.0-3 208-240	SYMO 10.0-3 480	SYMO 12.5-3 480	SYMO 15.0-3 208
Recommended PV power (kWp)		8.0 - 13.0	9.5 - 15.5	8.0 - 13.0	10.0 - 16.0	12.0 - 19.5
Max. usable input current (MPPT1/MPPT 2)		25.0 A / 16.5 A				50.0 A
Max. usable input current total (MPPT 1 + MPPT 2)		41.5 A				50.0 A
Max. array short circuit current (1.5 * Imax) MPPT 1/MPPT 2)		37.5 A / 24.8 A				75.0 A
Integrated DC string fuse holders		NA				6- and 6+
MPP-voltage range		300 - 500 V		300 - 800 V	350 - 800 V	325 - 850 V
Operating voltage range		200 - 600 V		200 - 1000 V		325 – 1000 V
Max. input voltage		600 V		1000 V		
Nominal input voltage	208 V	350 V	350 V	NA	NA	325 V
	240 V	370 V	370 V	NA	NA	NA
	480 V	NA	NA	675 V	685 V	NA
Admissable conductor size DC		AWG 14 - AWG 6 copper direct, AWG 6 aluminum direct, AWG 4 - AWG 2 copper or aluminum with input combiner				
Number of MPPT		2				1

OUTPUT DATA		SYMO 10.0-3 208-240	SYMO 12.0-3 208-240	SYMO 10.0-3 480	SYMO 12.5-3 480	SYMO 15.0-3 208
Max. output power	208 V	9995 VA	11995 VA	NA	NA	15000 VA
	240 V	9995 VA	11995 VA	NA	NA	NA
	480 V	NA	NA	9995 VA	12495 VA	NA
Max. continuous output current	208 V	27.7 A	33.3 A	NA	NA	41.6 A
	240 V	24.0 A	28.9 A	NA	NA	NA
	480 V	NA	NA	12.0 A	15.0 A	NA
Recommended OCPD/AC breaker size	208 V	35 A	45 A	NA	NA	60 A
	240 V	30 A	40 A	NA	NA	NA
	480 V	NA	NA	15 A	20 A	NA
Max. Efficiency		97.0 %	97.0 %	98.1 %	98.1 %	97.3%
CEC Efficiency	208 V	96.5 %	96.5 %	NA	NA	96.5%
	240 V	96.5 %	96.5 %	NA	NA	NA
	480 V	NA	NA	96.5 %	97.0 %	NA
Admissable conductor size AC		AWG 14 - AWG 6				
Grid connection		208 / 240 V	208 / 240 V	480 V Delta +N**		208 V
Frequency		60 Hz				
Total harmonic distortion		< 1.5 %	< 1.75 %	< 1.75 %	< 1.5 %	< 3.5%
Power factor		0 - 1 ind./cap.				

TECHNICAL DATA (10.0-3 208/240, 12.0-3 208/240, 10.0-3 480, 12.5-3 480, 15.0-3 208)

GENERAL DATA	STANDARD WITH ALL FRONIUS SYMO MODELS
Dimensions (width x height x depth)	20.1 x 28.5 x 8.9 inches
Degree of protection	NEMA 4X
Night time consumption	< 1 W
Inverter topology	Transformerless
Cooling	Variable speed fan
Installation	Indoor and outdoor installation
Ambient operating temperature range	-40°F - + 140 °F (-40 - +60 °C)
Permitted humidity	0 - 100 % (non-condensing)
DC connection terminals	6x DC+ and 6x DC- screw terminals for copper (solid / stranded / fine stranded) or aluminum (solid / stranded)
AC connection terminals	Screw terminals 14-6 AWG
Certificates and compliance with standards *(Except Symo 15.0 208 V)*	UL 1741-2010, UL1998 (for functions: AFCI and isolation monitoring), IEEE 1547-2003, IEEE 1547.1-2008, ANSI/IEEE C62.41, FCC Part 15 A & B, NEC Article 690, C22. 2 No. 107.1-01 (September 2001), UL1699B Issue 2 -2013, CSA TIL M-07 Issue 1 -2013
Certificates and compliance with standards *(Symo 15.0 208 V)*	UL 1741-2015, UL1998 (for functions: AFCI, RCMU and isolation monitoring), IEEE 1547-2003, IEEE 1547.1-2003, ANSI/IEEE C62.41, FCC Part 15 A & B, NEC 2014 Article 690, C22. 2 No. 107.1-01 (September 2001) , UL1699B Issue 2 -2013, CSA TIL M-07 Issue 1 -2013

GENERAL DATA	SYMO 10.0-3 208-240	SYMO 12.0-3 208-240	SYMO 10.0-3 480	SYMO 12.5-3 480	SYMO 15.0-3 208
Weight	91.9 lbs.		76.7 lbs.		78.3 lbs.

PROTECTIVE DEVICES	STANDARD WITH ALL FRONIUS SYMO MODELS
AFCI & 2014 NEC Compliant	Yes
DC disconnect	Yes
DC reverse polarity protection	Yes
Ground Fault Protection with Isolation Monitor Interrupter	Yes

INTERFACES	AVAILABLE WITH ALL FRONIUS SYMO MODELS
USB (A socket)	Datalogging and inverter update possible via USB
2x RS422 (RJ45 socket)	Fronius Solar Net, interface protocol
AVAILABLE WITH THE FRONIUS DATAMANAGER 2.0 CARD (ONLY ONE CARD REQUIRED FOR UP TO 100 INVERTERS)	
Wi-Fi/Ethernet/Serial/ Datalogger and webserver	Wireless standard 802.11 b/g/n / Fronius Solar.web, SunSpec Modbus TCP, JSON / SunSpec Modbus RTU
6 inputs and 4 digital I/Os	Load management; signaling, multipurpose I/O

**+N for sensing purposes - no current carrying conductor.

TECHNICAL DATA (15.0-3 480, 17.5-3 480, 20.0-3 480, 22.7-3 480, 24.0-3 480)

INPUT DATA		SYMO 15.0-3 480	SYMO 17.5-3 480	SYMO 20.0-3 480	SYMO 22.7-3 480	SYMO 24.0-3 480
Recommended PV power (kWp)		12.0 – 19.5	14.0 - 23.0	16.0 - 26.0	18.0 - 29.5	19.0 - 31.0
Max. usable input current (MPPT1/MPPT 2)		33.0 A / 25.0 A				
Max. usable input current total (MPPT 1 + MPPT 2)		51 A				
Max. array short circuit current (1.5 * Imax) MPPT 1/MPPT 2)		49.5 A / 37.5 A				
Integrated DC string fuse holders		NA	NA	6- and 6+		
MPP-voltage range		350 - 800 V	400 - 800 V	450 - 800 V	500 - 800 V	500 - 800 V
Operating voltage range		200 - 1000 V				
Max. input voltage		1000 V				
Nominal input voltage	208 V	NA	NA	NA	NA	NA
	240 V	NA	NA	NA	NA	NA
	480 V	685 V	695 V	710 V	720 V	720 V
Admissable conductor size DC		AWG 14 - AWG 6 copper direct, AWG 6 aluminum direct, AWG 4 - AWG 2 copper or aluminum with input combiner				
Number of MPPT		2				

TECHNICAL DATA (15.0-3 480, 17.5-3 480, 20.0-3 480, 22.7-3 480, 24.0-3 480)

OUTPUT DATA		SYMO 15.0-3 480	SYMO 17.5-3 480	SYMO 20.0-3 480	SYMO 22.7-3 480	SYMO 24.0-3 480
Max. output power	208 V	NA	NA	NA	NA	NA
	240 V	NA	NA	NA	NA	NA
	480 V	14995 VA	17495 VA	19995 VA	22727 VA	23995 VA
Max. continuous output current	208 V	NA	NA	NA	NA	NA
	240 V	NA	NA	NA	NA	NA
	480 V	18.0 A	21.0 A	24.0 A	27.3 A	28.9 A
Recommended OCPD/AC breaker size	208 V	NA	NA	NA	NA	NA
	240 V	NA	NA	NA	NA	NA
	480 V	25 A	30 A	30 A	35 A	40 A
Max. Efficiency		98.0 %	98.0 %			
CEC Efficiency	208 V	NA	NA	NA	NA	NA
	240 V	NA	NA	NA	NA	NA
	480 V	97.0 %	97.5 %	97.5 %	97.5 %	97.5 %
Admissable conductor size AC		AWG 14 - AWG 6				
Grid connection		480 V Delta +N**				
Frequency		60 Hz				
Total harmonic distortion		< 1.5 %	< 1.25 %	< 1.0 %	<1.25 %	< 1.0 %
Power factor		0 - 1 ind./cap.				

**+N for sensing purposes - no current carrying conductor.

TECHNICAL DATA (15.0-3 480, 17.5-3 480, 20.0-3 480, 22.7-3 480, 24.0-3 480)

GENERAL DATA	STANDARD WITH ALL FRONIUS SYMO MODELS
Dimensions (width x height x depth)	20.1 x 28.5 x 8.9 inches
Degree of protection	NEMA 4X
Night time consumption	< 1 W
Inverter topology	Transformerless
Cooling	Variable speed fan
Installation	Indoor and outdoor installation
Ambient operating temperature range	-40°F - + 140 °F (-40 - +60 °C)
Permitted humidity	0 - 100 % (non-condensing)
DC connection terminals	6x DC+ and 6x DC- screw terminals for copper (solid / stranded / fine stranded) or aluminum (solid / stranded)
AC connection terminals	Screw terminals 14-6 AWG
Certificates and compliance with standards	UL 1741-2010, UL1998 (for functions: AFCI and isolation monitoring), IEEE 1547-2003, IEEE 1547.1-2008, ANSI/IEEE C62.41, FCC Part 15 A & B, NEC Article 690, C22. 2 No. 107.1-01 (September 2001), UL1699B Issue 2 -2013, CSA TIL M-07 Issue 1 -2013

GENERAL DATA	SYMO 15.0-3 480	SYMO 17.5-3 480	SYMO 20.0-3 480	SYMO 22.7-3 480	SYMO 24.0-3 480
Weight	95.7 lbs.				

PROTECTIVE DEVICES	STANDARD WITH ALL FRONIUS SYMO MODELS
AFCI & 2014 NEC Compliant	Yes
DC disconnect	Yes
DC reverse polarity protection	Yes
Ground Fault Protection with Isolation Monitor Interrupter	Yes

INTERFACES	AVAILABLE WITH ALL FRONIUS SYMO MODELS
USB (A socket)	Datalogging and inverter update possible via USB
2x RS422 (RJ45 socket)	Fronius Solar Net, interface protocol
AVAILABLE WITH THE FRONIUS DATAMANAGER 2.0 CARD (ONLY ONE CARD REQUIRED FOR UP TO 100 INVERTERS)	
Wi-Fi/Ethernet/Serial/ Datalogger and webserver	Wireless standard 802.11 b/g/n / Fronius Solar.web, SunSpec Modbus TCP, JSON / SunSpec Modbus RTU
6 inputs and 4 digital I/Os	Load management; signaling, multipurpose I/O

FRONIUS SYMO 24.0-3 480 TEMPERATURE DERATING CURVE

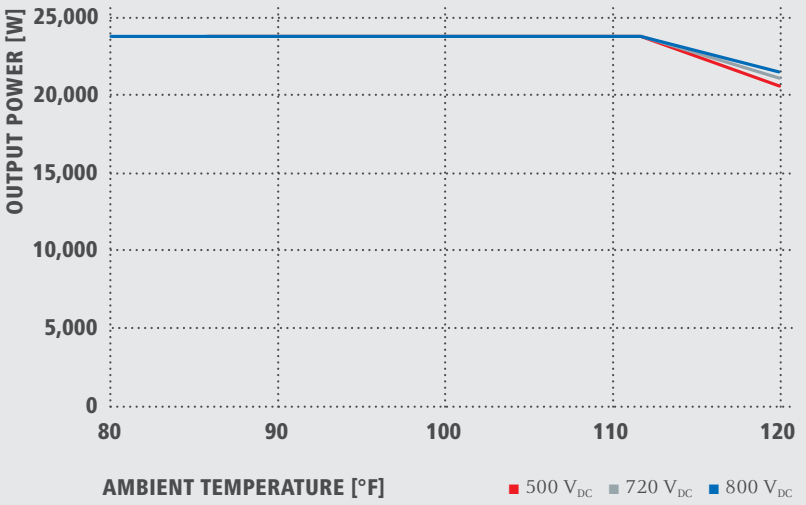

FRONIUS SYMO 24.0-3 480 CEC EFFICIENCY CURVE

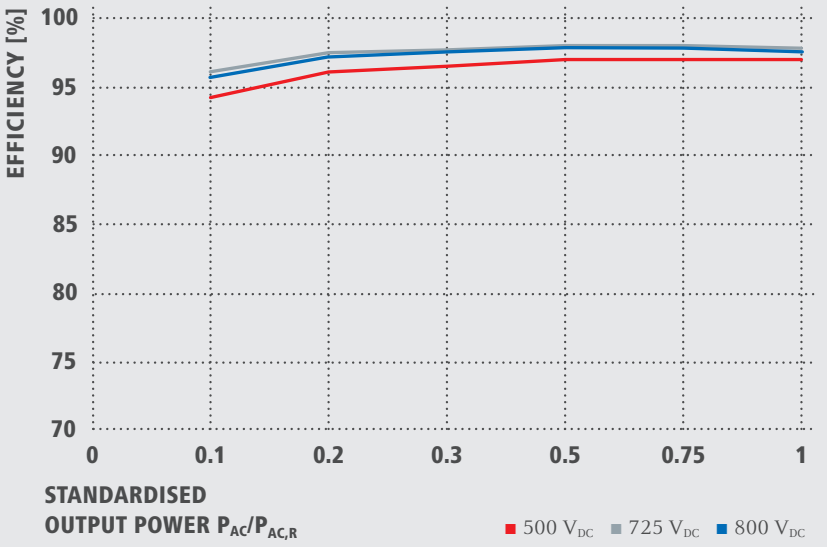

/ Perfect Welding / Solar Energy / Perfect Charging

WE HAVE THREE DIVISIONS AND ONE PASSION: SHIFTING THE LIMITS OF POSSIBILITY.

/ Whether welding technology, photovoltaics or battery charging technology – our goal is clearly defined: to be the innovation leader. With around 3,300 employees worldwide, we shift the limits of what's possible - our record of over 900 granted patents is testimony to this. While others progress step by step, we innovate in leaps and bounds. Just as we've always done. The responsible use of our resources forms the basis of our corporate policy.

Further information about all Fronius products and our global sales partners and representatives can be found at **www.fronius.com**

v05 May 2015 EN

Fronius USA LLC
6797 Fronius Drive
Portage, IN 46368
USA
pv-support-usa@fronius.com
www.fronius-usa.com

Q.PLUS L-G4.2 330-340

Q.ANTUM SOLAR MODULE

The Q.ANTUM solar module Q.PLUS L-G4.2 with power classes up to 340 Wp is the strongest module of its type on the market globally. Powered by 72 Q CELLS solar cells Q.PLUS L-G4.2 was specially designed for large solar power plants to reduce BOS costs. Only Q CELLS offers German engineering quality with our unique triple Yield Security.

LOW ELECTRICITY GENERATION COSTS

Higher yield per surface area and lower BOS costs thanks to higher power classes and an efficiency rate of up to 17.4 %.

INNOVATIVE ALL-WEATHER TECHNOLOGY

Optimal yields, whatever the weather with excellent low-light and temperature behavior.

ENDURING HIGH PERFORMANCE

Long-term yield security with Anti-PID Technology[1], Hot-Spot-Protect and Traceable Quality Tra.Q™.

LIGHT-WEIGHT QUALITY FRAME

High-tech aluminum alloy frame, certified for high snow (5400 Pa) and wind loads (2400 Pa).

A RELIABLE INVESTMENT

Inclusive 12-year product warranty and 25-year linear performance guarantee[2].

EUPD RESEARCH
TOP BRAND PV
MODULES
EUROPE
2015

Q CELLS
YIELD SECURITY
ANTI PID TECHNOLOGY (APT)
HOT-SPOT PROTECT (HSP)
TRACEABLE QUALITY (TRA.Q™)

Photon
Q CELLS
Best polycrystalline solar module 2013
Q.PRO-G2 235
151 modules tested

[1] APT test conditions: Cells at -1000 V against grounded, with conductive metal foil covered module surface, 25 °C, 168 h

[2] See data sheet on rear for further information.

THE IDEAL SOLUTION FOR:

Ground-mounted solar power plants

Engineered in **Germany**

Q CELLS

MECHANICAL SPECIFICATION

Format	78.5 in × 39.4 in × 1.38 in (including frame) (1994 mm × 1000 mm × 35 mm)
Weight	52.9 lb (24 kg)
Front Cover	0.13 in (3.2 mm) thermally pre-stressed glass with anti-reflection technology
Back Cover	Composite film
Frame	Anodised aluminum
Cell	6 × 12 Q.ANTUM solar cells
Junction box	3.35-4.13 in × 2.36-3.15 in × 0.59-0.67 in (85-105 mm × 60-80 mm × 15-17 mm), Protection class ≥ IP67, with bypass diodes
Cable	4 mm² Solar cable; (+) ≥ 47.24 in (1200 mm), (-) ≥ 47.24 in (1200 mm)
Connector	Amphenol H4 UTX, IP68

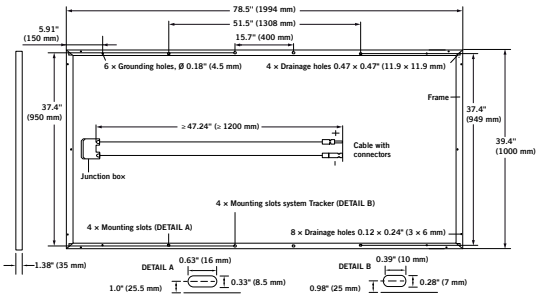

ELECTRICAL CHARACTERISTICS

POWER CLASS				330	335	340
MINIMUM PERFORMANCE AT STANDARD TEST CONDITIONS, STC[1] (POWER TOLERANCE +5 W / -0 W)						
Minimum	Power at MPP[2]	P_{MPP}	[W]	330	335	340
	Short Circuit Current*	I_{SC}	[A]	9.49	9.54	9.59
	Open Circuit Voltage*	V_{OC}	[V]	46.55	46.81	47.07
	Current at MPP*	I_{MPP}	[A]	8.91	8.97	9.03
	Voltage at MPP*	V_{MPP}	[V]	37.02	37.33	37.63
	Efficiency[2]	η	[%]	≥ 16.5	≥ 16.8	≥ 17.1
MINIMUM PERFORMANCE AT NORMAL OPERATING CONDITIONS, NOC[3]						
Minimum	Power at MPP[2]	P_{MPP}	[W]	244.7	248.4	252.1
	Short Circuit Current*	I_{SC}	[A]	7.65	7.69	7.73
	Open Circuit Voltage*	V_{OC}	[V]	43.44	43.68	43.92
	Current at MPP*	I_{MPP}	[A]	6.99	7.04	7.09
	Voltage at MPP*	V_{MPP}	[V]	35.01	35.29	35.56

[1] 1000 W/m², 25°C, spectrum AM 1.5 G [2] Measurement tolerances STC ± 3%; NOC ± 5% [3] 800 W/m², NOCT, spectrum AM 1.5 G * typical values, actual values may differ

Q CELLS PERFORMANCE WARRANTY

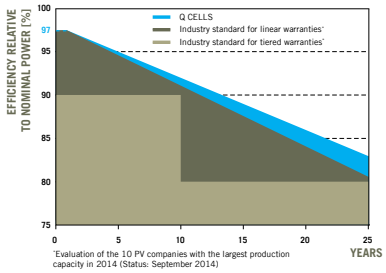

At least 97 % of nominal power during first year. Thereafter max. 0.6 % degradation per year.
At least 92 % of nominal power after 10 years.
At least 83 % of nominal power after 25 years.

All data within measurement tolerances. Full warranties in accordance with the warranty terms of the Q CELLS sales organisation of your respective country.

PERFORMANCE AT LOW IRRADIANCE

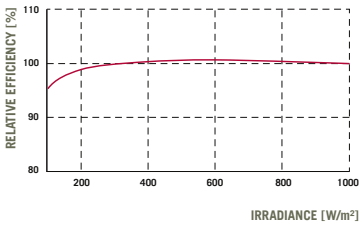

Typical module performance under low irradiance conditions in comparison to STC conditions (25 °C, 1000 W/m²).

TEMPERATURE COEFFICIENTS

Temperature Coefficient of I_{SC}	α	[%/K]	+0.04	**Temperature Coefficient of V_{OC}**	β	[%/K]	−0.29
Temperature Coefficient of P_{MPP}	γ	[%/K]	−0.40	**Normal Operating Cell Temperature**	NOCT	[°F]	113 ± 5.4 (45 ± 3 °C)

PROPERTIES FOR SYSTEM DESIGN

Maximum System Voltage V_{SYS}	[V]	1500 (IEC) / 1500 (UL)	**Safety Class**	II
Maximum Series Fuse Rating	[A DC]	15	**Fire Rating**	C / TYPE 1
Max Load (UL)[2]	[lbs/ft²]	75 (3600 Pa)	**Permitted module temperature on continuous duty**	-40 °F up to +185 °F (-40 °C up to +85 °C)
Load Rating (UL)[2]	[lbs/ft²]	33 (1600 Pa)	[2] see installation manual	

QUALIFICATIONS AND CERTIFICATES

IEC 61215 (Ed. 2); IEC 61730 (Ed. 1), Application class A
This data sheet complies with DIN EN 50380.

C Certified US
UL 1703
(254141)

PACKAGING INFORMATION

Number of Modules per Pallet	29
Number of Pallets per 40' Container	22
Pallet Dimensions (L × W × H)	81.3 × 45.3 × 46.9 in (2065 × 1150 × 1190 mm)
Pallet Weight	1671 lbs (758 kg)

NOTE: Installation instructions must be followed. See the installation and operating manual or contact our technical service department for further information on approved installation and use of this product.

Hanwha Q CELLS USA Corp.
300 Spectrum Center Drive, Suite 1250, Irvine, CA 92618, USA | TEL +1 949 748 59 96 | WEB www.q-cells.com

Engineered in **Germany**

Specifications subject to technical changes © **Hanwha Q CELLS** Q.PLUS L-G4.2_330-340_2015-09_Rev03_NA

Attachment D

Orchard Road Solar I, LLC Project
45 Day Notice Letter for 500 kW Solar Project
Interested Persons and Entities Entitled to Notice

Vermont Public Service Board
112 State Street, Drawer 20
Montpelier, VT 05620-2701

Vermont Agency of Natural Resources
Secretary's Office
1 National Life Drive, Davis 2
Montpelier, VT 05620-3901

Vermont Public Service Department
Commissioner's Office and Director of Public Advocacy
112 State Street, 3rd Floor
Montpelier, VT 05620-2601

Middletown Springs Planning Commission
PO Box 1232
Middletown Springs, VT 05757

Middletown Springs Selectboard
PO Box 1232
Middletown Springs, VT 05757

Rutland Regional Planning Commission
PO Box 965
Rutland, VT 05702

Green Mountain Power
2152 Post Road
Rutland, VT 05701
c/o Distributed Resources

Spitalny, Richard M
24 Tanglewild Rd.
Chappaqua, NY 10514

Fitzpatrick, Ted & Dina
12525 Jot Em Down Lane
Odessa, FL 33556

Bartlett, Steven & Debra
120 Orchard Road
Middletown Springs, VT 05757

Lattuca, Russell A
623 Marlbury Lane
Longboard Key, FL 34228

Gaeckle, Robert & Claire
45 Beekman Rd.
Summit, NJ 07901

Parker, Gerald & Janet
PO Box 627
Poultney, VT 05741

Wilder, Frank A & Janice A
260 West St.
Middletown Springs, VT 05757

Freilich, Douglas & Sperling, Julie
PO Box 65
Pawlet, VT 05761

Gutmann, Karen L
290 West St.
Middletown Springs, VT 05757

Russell, Thomas
300 West St.
Middletown Springs, VT 05757

Rocks & Trees, Inc
C/O Ellen Secord
320 West St.
Middletown Springs, VT 05757

Lamson, Brian & Connie
334 West St.
Middletown Springs, VT 05757

Cooper, Roy & Elizabeth
327 West St.
Middletown Springs, VT 05757

Marcy, Marilyn & Labate, Maureen
21 North St.
Middletown Springs, VT 05757

Labate, Maureen
1537 Finel Hollow Road
Poultney, VT 05764

Parker, Jerry
425 East Road
Poultney, VT 05764

Russell, Neil & Elizabeth
PO Box 279
West Rutland, VT 05777

Exhibit ORS-RV-6

Rule 5.500 Fast Track Analysis for Orchard Road Solar 1, LLC

Located near 30 Orchard Road Middletown Springs, VT

Connected to GMP POg7 L73 P9 Tag 477871

Rob Horton

12/11/2015

Document Revision no.	Date	Author	Comments
0	December 11, 2015	Rob Horton	Creation of the document

In this document GMP provides conclusion of its supplemental review of the proposed project. The study aims to analyze and recommend practical and economical solutions, if required, to potential adverse impacts to GMP's electric distribution, substation and transmission systems caused by the distributed resource.

163 ACORN LANE • COLCHESTER, VT 05446-6611 • PHONE (802) 864-5731 • FAX (802) 655-8419

SECTION 1

Project Description, Notes, Fast Track Scope

Project Description: Orchard Road Solar 1 LLC, proposes to install a 500 kW-AC Net Metering Solar project (the "Project"). For the purposes of the Fast Track analysis the project was assumed to connect to the GMP system on Orchard Road in Middletown Springs, VT at the GMP facility POg7 / L73 / P9 (circuit/line/pole), which is a 7.2/12.47 kV grounded-wye configuration interconnection point that currently does not have three phase available.

As of this fast track, the POg7 circuit has a total of about 327 kW-AC of installed and proposed distributed generation projects which does not include this Project.

Are there any existing relevant studies?

There are no existing relevant studies for the POg7 circuit.

Are there any other existing materials?

There is an existing CYMDIST unbalanced load flow model.

Modeling Assumptions:

The modeling assumption used in this fast track is based on the Electrical One-Line Diagram submitted for the Project.

Fast Track Scope: The Fast Track Analysis is meant to be a coarse screen that allows easily connectible projects to proceed to an Interconnection Agreement without having to do any additional studies. If future studies are required, this analysis can be used to pin point areas of additional study.

163 ACORN LANE • COLCHESTER, VT 05446-6611 • PHONE (802) 864-5731 • FAX (802) 655-8419

SECTION 2

Rule 5.500 Criteria and Fast Track Review

Criteria that are not passed will be colored in red**.**

1) **The Interconnection Requester's proposed Generation Resource meets the applicable codes and standards of Section 5.510 or is certified equipment package under Section 5.511.**

   The inverters proposed for the Project are (22) Fronius SYMO 22.7-3 480 units which comply with UL1741 and IEEE 1547 standards.

2) **The proposed interconnection point is not at transmission voltage (i.e. not over 23 kV line to line or 13.28 line to neutral).**

   The Project proposes to interconnect to GMP's POg7 distribution circuit, which has a voltage level of 7.2/12.47 kV and a four-wire, grounded-wye line configuration. The POg7 distribution circuit is not a transmission line.

3) **For interconnection to a Radial Feeder, the aggregated generation, including the proposed Generation Resource, on the circuit will not exceed 15% of the line section annual peak load as most recently measured at the substation. A line section is that portion of a distribution system connected to a customer bounded by Automatic Disconnect Devices or the end of the distribution line.**

   POg7 Circuit Breaker– Max load is 1.69 MVA. The aggregated proposed and installed generation including this project is about 0.827 MW, this is roughly 49.1% of the peak load at the circuit recloser.

   The Project fails the test.

4) **The aggregated generation, including the proposed Generation Resource, on a distribution circuit will not contribute more than 10% to the distribution circuit's maximum fault current at the point on the high voltage (primary) level nearest the proposed interconnection point.**

   The maximum available fault current without any generation contribution taken into account is calculated as 459 Amps Line-to-Ground ("LG") and 599 Amps three phase Line-to-Line-to-Line ("LLL") at the POI. The connected and proposed generation will increase the fault current 471 Amps LG and 633 Amps LLL, this is an increase of about 5.7%.

5) **The aggregated generation, including the proposed Generation Resources, on a distribution circuit will not cause any distribution protective devices and equipment (including, but not**

163 ACORN LANE • COLCHESTER, VT 05446-6611 • PHONE (802) 864-5731 • FAX (802) 655-8419

limited to, substation breakers, fuse cutouts, and line reclosers), or customer equipment on the system to exceed 85% of the short-circuit interrupting capability; nor is the Generation Resource proposed for a circuit that already exceeds 85% of the short-circuit interrupting capability.

This condition is satisfied.

6) **For interconnection of a proposed single-phase or effectively-grounded three-phase Generation Resource where the primary distribution System is three-phase, four-wire, the Generation Resource will be connected line-to-neutral. For interconnection of a proposed single-phase or three-phase Generation Resource where the primary distribution system is three-phase, three-wire, the Generation Resource will be connected line-to-line.**

   The POg7 circuit is a three phase, four wire system, otherwise known as "multi-grounded wye". The proposed project will be connected through a grounded wye- wye transformer. When connected to the Substation transformer, the Project is considered as an "effectively grounded" system with respect to GMP's distribution circuit.

7) **Voltage drop due to starting the proposed generator is within acceptable limits, meaning that inrush current, due to starting the proposed Generation Resource up to once per hour, is not greater than 3% of the available fault current. Voltage drop due to starting the proposed Generation Resource more than once per hour meets a tighter inrush-current tolerance, to be determined by the Interconnecting Utility.**

   For inverter based PV system, inrush current is not a significant indicator of voltage drop or flicker as it would for rotating machine generators. To measure the sudden change in voltage, GMP's voltage flicker test for inverter based PV systems shall be used to test the impact of the Project and the aggregate generation to the distribution circuit. The voltage flicker test will monitor the voltage readings during the startup of the aggregate generators as well as the cloud shading effects on the PV modules. For a project of this size, the cloud shading effect will consider the output drop of 70% for the aggregate PV system i.e. a drop in output from its nameplate rating to 30% of nameplate before any voltage regulation can react to the change of voltage. The % difference in voltage readings at the Project's POI and at any point in the distribution circuit shall be validated using the GE flicker table. If the 70% drop in Project output results in less than a 1.8% change in primary voltage at the POI, the Project passes the voltage flicker test.

   In this case, the voltage change is about 1.68% and the Project passes the test.

8) **For any single Generation Resource, the available utility short circuit current at the Point of Interconnection divided by the rated output current of the Generation Resource is no less than:**

163 ACORN LANE • COLCHESTER, VT 05446-6611 • PHONE (802) 864-5731 • FAX (802) 655-8419

a) 50 for Generation Resource of less than 100 kW;
b) 40 for Generation Resources from 100 kw to less than 500 kW; and
c) 20 for Generation Resources equal to or greater than 500 kW.

The line-to-ground fault current at the nearest three-phase from the POI on the primary side is 599 Amps.

*The per phase amps of the project are 500 kW / (3*7.2 kV) = 23.15amps*

599 / 23.15 = 25

9) Aggregate generation, including the Generation Resource, on a circuit will not exceed 2 MVA in an area where there are known or posted transient stability limitations to generating units located in the general electrical vicinity (e.g. three or four busses from the point of interconnection).

There are no transient stability limitations that GMP is aware of.

10) No System Upgrades, in excess of limited preparation that do not necessitate a Facilities Study, are required to facilitate the interconnection of the Generation Resource.

Further studies will not be necessary. The following minor upgrades are required:

1) *Move the 12T fuse at Tag 571164 (L73 P6) to just beyond the site at about L73 P9*
2) *Upgrade the 20T fuse at Tag 570580 (L7 P233) to 40T*
3) *Adding 2 phases about 1,700' and;*
4) *a short line extension from the last existing GMP pole*

Upstream reclosers, breaker and regulators are OK as is. There are no ampacity / capacity violations.

11) For interconnection of the proposed Generation Resource to the load side of spot network protectors, the proposed Generation Resource utilizes inverter-based equipment and aggregate generation, including proposed Generation Resource, will not exceed the smaller of 5% of a spot network's maximum load or 50 kW. Synchronous generators cannot be connected to a secondary network.

There are no spot networks on the GMP system.

12) If the Generation Resource is to be connected on a shared, single-phase secondary, aggregate generation capacity on the shared secondary, including the proposed generation, will not exceed 20 kVA.

Not Applicable. This project is three phase.

163 ACORN LANE • COLCHESTER, VT 05446-6611 • PHONE (802) 864-5731 • FAX (802) 655-8419

13) If the Generation Resource is single-phased and is to be interconnected on a center tap neutral of a 240 volts service, its addition will not create an imbalance between the two side of the 240 volt service of more than 20% of the service transformer nameplate.

Not Applicable. This project is three phase.

163 ACORN LANE • COLCHESTER, VT 05446-6611 • PHONE (802) 864-5731 • FAX (802) 655-8419

SECTION 3

Fast Track Summary

The project did not pass criterion #3.

Criteria #3 is based on a generation to peak feeder load ratio. Taken by itself, it is not especially informative at face value since the majority of projects this size exceed 15% of the peak load through a protective device. This project fails criteria 3 but we see no reason that this cannot be interconnected based on criteria 3 alone. Failure to satisfy that test does not mean that there will be problems if the generator is allowed to interconnect. GMP has reviewed thermal loading and system protection. In the case of this project, this review showed no issues. Minor system upgrades have been noted in criterion #10.

Conclusion:

For the above reasons it is not necessary for this Project to go through a System Impact or Facility Study to move forward in the interconnection process.

Exhibit ORS-RV-7

VERMONT

State of Vermont
Division for Historic Preservation
Deane C. Davis Building, 6th Floor
One National Life Drive, Montpelier, VT 05620-0501
www.accd.vermont.gov/strong_communities/preservation/

[phone] 802-828-3540

Agency of Commerce and Community Development

July 13, 2016

Judith C. Whitney, Clerk
Vermont Public Service Board
112 State Street
Montpelier, VT 05620-2701

Re: Application of Orchard Road Solar I, LLC pursuant to 30 V.S.A §§ 219a and 248 for a Certificate of Public Good authorizing the installation and operation of 500 kW group net-metered photovoltaic electric facility located near 30 Orchard Road in Middletown Springs, Vermont. Public Service Board Review.

Dear Ms. Whitney:

Thank you for the opportunity to comment on the above-referenced project. The Division for Historic Preservation (VDHP) is reviewing this undertaking (VDHP #CA16-020) for purposes of 30 V.S.A., Section 248. Project review consists of identifying the project's potential impacts to historic buildings, structures, historic districts, historic landscapes and settings, and known or potential archeological resources. The purpose of the VDHP's comments is to provide the Public Service Board (PSB) with the necessary information for their Section 248 review.

The proposed project consists of the construction of a 500 kW solar generation facility on an approximately 5 acre section of a 126 acre parcel of land located off Orchard and Wescott Roads in Middletown Springs, Vermont. The facility will consist of approximately 2,268 photovoltaic modules attached to fixed ground mounted racking systems arranged in 11 east to west rows. Related infrastructure includes an access road, string inverters, an equipment pad, a gated perimeter fence, and underground electrical connections. The facility will interconnect to the existing Green Mountain Power Inc. distribution system utilizing an existing overhead electric line along Wescott Road that will upgraded to 3-phase and the addition of three pole mounted transformers to an existing or new utility pole near the array. An underground electric line from the array's equipment pad will connect to the upgraded overhead line.

The project area is situated on sloping glacial hillside west of VT Route 140 and the Poultney River that was formerly used as an apple orchard. No archaeological sites or archaeologically sensitive area were identified in the project area during a site visit to the property on February 15, 2016 which identified that the array will be primarily located on sloping surfaces. In addition to our archaeological review, the VDHP has considered the effects of the project on above ground historic

DRAFT

structures, districts, and landscapes. The VDHP has reviewed the Proposed Solar Array Site Plan dated 6/29/16. While there will be no direct effects to any above ground historic sites, there will be possible indirect visual effects for the properties closest to the project site. The proposed solar facility will be east of 67 Wescott Road and south of 30 Orchard Road. The structure at 67 Wescott Road is less than 50 years old and is not historic. The farm complex at 30 Orchard Road was listed on the State Register of Historic Places on May 7, 1980 as #1111-16 Spitalny House. However, due to the distance, terrain, and the existing intervening vegetation it is VDHP's opinion that there will be limited visual effects on the historic property at 30 Orchard Road and other standing historic sites with views of the sloping hillside location of the solar facility. Therefore VDHP concludes that the facility will have no adverse effect on the historic character of any standing historic structures, districts, or landscapes.

Based on the above considerations, the VDHP concludes that the Orchard Road Solar Project will have **No Adverse Effect** on any historic sites listed in or eligible for inclusion in the State Register of Historic Places. Thank you for your cooperation in protecting Vermont's irreplaceable historic and archeological heritage. R. Scott Dillon and Elizabeth G. Peebles reviewed this project and prepared this letter. I concur with the findings and conclusions described above.

Sincerely:
VERMONT DIVISION FOR HISTORIC PRESERVATION

Laura V. Trieschmann
State Historic Preservation Officer

Cc: Service List